TWAUDiO®

WHF

Assembly Instructions

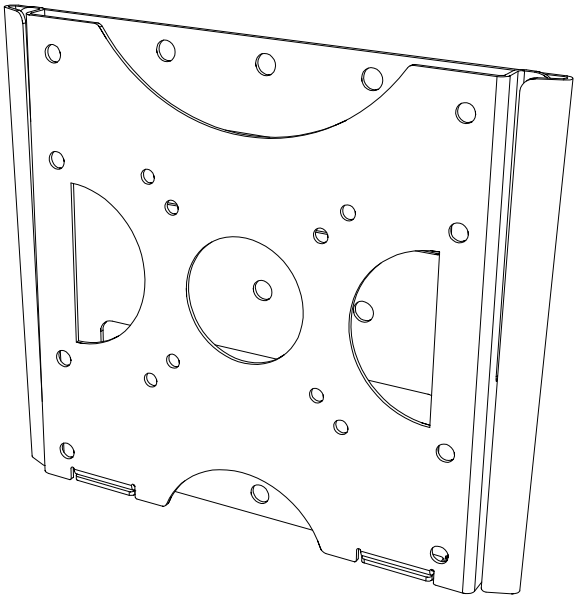

Introduction

Thank you for choosing a high-quality product “MADE IN GERMANY” from the brand TW AUDiO.

The wall mount flat WHF is an accessory for the B10i or B14i loudspeaker.

It is characterized by a subtle look, a remarkable size to weight ratio and ease of use.

If you lend your product to another party, inform that party of the safety-related operating procedures and hand over this assembly guide. If you require additional copies of this manual, you can obtain them free of charge from TW AUDiO or download them from www.twaudio.de

Instructions in this user manual

Strictly adhere to the instructions contained in this operating manual that are marked as follows:

WARNING

This symbol in combination with the signal word “Warning” identifies a potentially hazardous situation. Failure to comply with this safety instruction can lead to serious injury or even death.

CAUTION

This symbol in combination with the signal word “Caution” identifies a potentially hazardous situation. Failure to comply with this safety instruction can lead to light or moderate injury.

NOTE

This symbol in combination with the signal word “Note” identifies a potentially hazardous situation. Failure to comply with this safety instruction can lead to product damage.

TIP

This symbol in combination with the signal word “Tip” identifies additional information or notes that will simplify working with TW AUDiO products on the basis of practical experience.

Notes on the products

Read manual before use!

Before using the device, carefully read the assembly instructions and keep it with the WHF wall mount flat.

General information

Assembly instructions: OM-WHF
Version 3.0 en, 02/2026
© by TW AUDiO INTERNATIONAL GmbH 2026; all rights reserved.

All information contained in this operating manual was correct to the best of our knowledge at the time of printing.

Quality warranties or assurance of suitability for a certain type of use based on the technical specifications, dimensions and weights are not granted by TW AUDiO.

TW AUDiO also shall not assume liability for any secondary damage (property damage and/or personal injury) nor for the failure to comply with this operating manual!

TW AUDiO reserves the right to update this document based on recent developments.

TW AUDiO INTERNATIONAL GmbH
Osterholzallee 140-2
71636 Ludwigsburg
Germany

Phone : + 49 (0) 71 41-48 89 89 0
Fax: + 49 (0) 71 41-48 89 89 99
E-Mail: info@twaudio.de
WWW: www.twaudio.de

Content

1. Safety | Intended use 5
2. Overview 7
2.1 Components 7
3. Technical data 8
3.1 Data sheet 8
3.2 Description of the plates from the scope of delivery 8
4. Commissioning 9
4.1 Setup 9
4.2 Necessary tools for setting up the flown system 9
4.3 Preparing the subwoofer 10
4.4 Preparing the WHF wall mount flat 12
4.5 Mounting the speaker plate to the subwoofer 13
4.6 Mounting the centering as well as pressure plate to the subwoofer 14
4.7 Mounting the wall plate to different construction forms of a wall 15
4.8 Hang loudspeaker on wall 16
4.9 Screwing the plates of the WHF 17
5. Transport and storage 18
6. CE Conformity Declaration 19
7. Disposal 19

1. Safety | Intended use

Please adhere to the following safety instructions to avoid risks when using accessories.

The WHF wall mount flat was developed for use in professional sound systems. The wall mount slim may only be used by trained and qualified personnel.

Note the operating modes described in this assembly instructions. Other uses are not permissible.

Damage caused by improper use is not covered by TW AUDiO.

WARNING

Before every operation, check the scope of delivery of the WHF wall mount flat for its completeness and ensure that all parts are in perfect condition.

The scope of delivery includes specified components. Only use the recommended and certified components.

WARNING

The WHF wall mount flat may only used with subwoofers, which are listed under Chapter 3.1.

This rigging manual describes how to use the WHF wall mount flat correctly. Any other use shall be deemed improper and may result in damage or even injury.

Modifications or alterations to individual parts of the WHF wall mount flat are not permitted! Danger to life!

CAUTION

The WHF wall mount flat is designed for indoor use.

WARNING

The WHF wall mount flat may only be used by trained and qualified personnel. Personnel must check the WHF wall mount flat for suitability before each use.

WARNING

The WHF wall mount flat must be taken out of operation immediately as soon as visible damage to the parts can be seen.

WARNING

Please keep all elements of the WHF wall mount flat away from children! The small parts can easily be swallowed and lead to suffocation!

WARNING

The payload of the WHF wall mount flat is designed of not more than one B10i or B14i loudspeaker. Do not exceed this payload.

WARNING

Before mounting the WHF wall mount flat check that walls are capable to carrying the payload of the components.

WARNING

Make sure that no water pipes, electrical lines or any other lines are behind the intended place of mounting.

WARNING

Only use wall plugs and screws which are suitable for the intended mounting and structural fabric. All screws must be set and tightened properly. Ensure that the fixing holes have the correct depth and diameter. Always use all fixing holes.

WARNING

When moving (assembling, dismantling, maintaining) the WHF wall mount flat with the subwoofer, ensure sufficient space to prevent collisions with other objects.

CAUTION

Do not squeeze or twist the electrical cables of the subwoofer during the installation of the WHF wall mount flat! The respective national electrotechnical rules and regulations are applicable.

2. Overview

2.1 Components

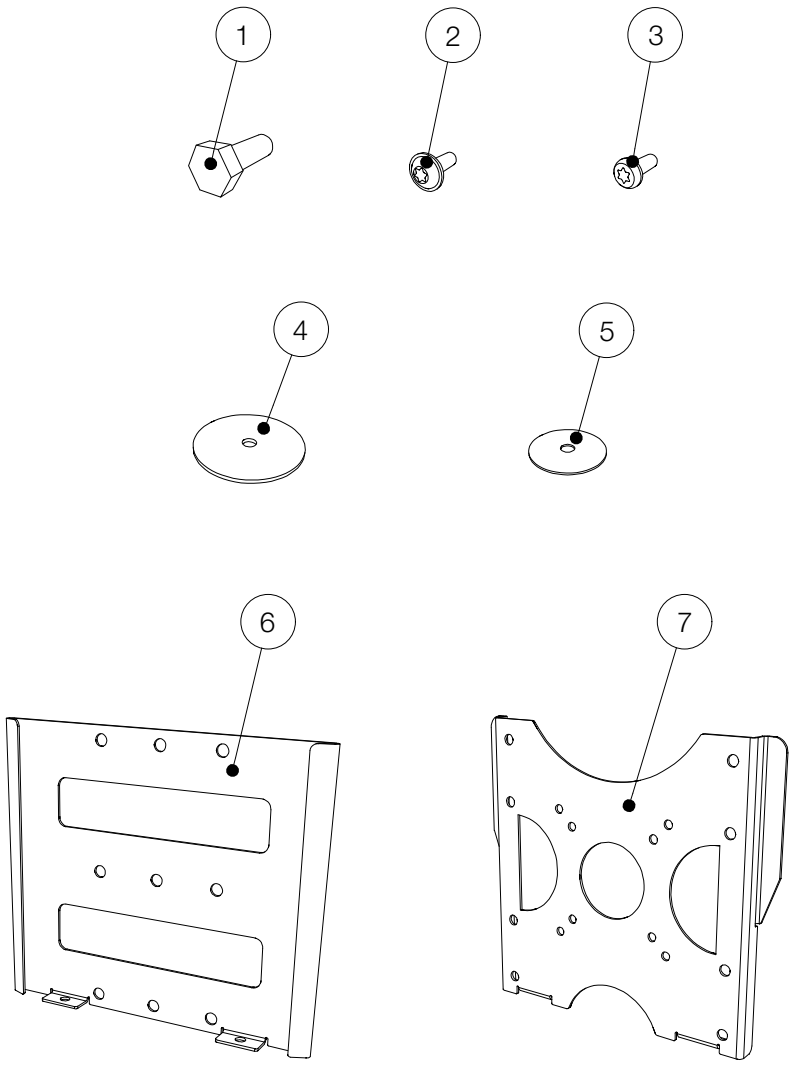

Figure 2.1 - Overview

1. Hexagon head screw M10 x 25 ..... 1 piece
2. Pan head screw with flange M6 x 18 ..... 4 pieces
3. Pan head screw without flange M6 x 16 ..... 2 pieces
4. Pressure plate ..... 1 piece
5. Centering plate ..... 1 piece
6. Sheet metal for mounting on wall ..... 1 piece
7. Sheet metal for mounting on loudspeaker ..... 1 piece

3. Technical data

3.1 Data sheet

Maximum load capacity	1x B10i or 1x B14i
Dimensions (h x w x d)	275 x 232 x 21 mm [10.83 x 9.13 x 0.83 in]
Weight	1,9 kg [4.19 lbs]
Surface	Powder-coated

NOTE

Please note that the loudspeakers
- B10i
- B14i

are named as subwoofers in the manual.

Please also note that the B14i loudspeaker is used as an example for all graphics with subwoofer systems.

3.2 Description of the plates from the scope of delivery

NOTE

Note that generalized throughout the manual the two plates from the scope of delivery are called:

- Pos.6: Sheet metal for mounting on wall as wall plate

and
- Pos.7: Sheet metal for mounting on loudspeaker as loudspeaker plate.

4. Commissioning

4.1 Setup

The WHF wall mount flat is designed for hanging operation on walls.

WARNING

Please note that setting up the system structures always requires two persons!

NOTE

TW AUDiO recommends using only the accessories specified by TW AUDiO for securing and mounting the wall mount slim.

WARNING

Whenever you make changes to the flown system, always use a new hexagon head screw (item 1 on scope of delivery) and pan head screws (item 2 and 3 on scope of delivery) as delivered with the product.
These items are available from TW AUDiO.

4.2 Necessary tools for setting up the flown system

Keep the following tools ready for assembling the flown systems:

- Torque wrench
- Extension for bit insert, min. 150 mm [min. 5,9 in]
- Bit insert for torque wrench: TX30
- Bit insert for torque wrench: TX50
- SW17 fork wrench

4.3 Preparing the subwoofer

NOTE

Remove the M10 screw at the subwoofer.

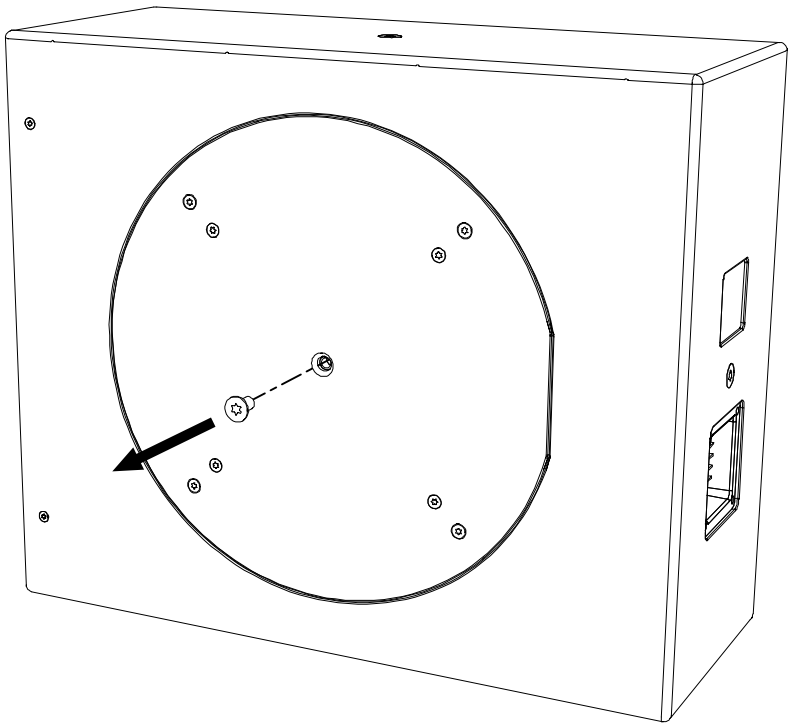

Figure 4.3.1 - Remove the M10 screw

NOTE

Then remove the four M6 screws from the subwoofer.

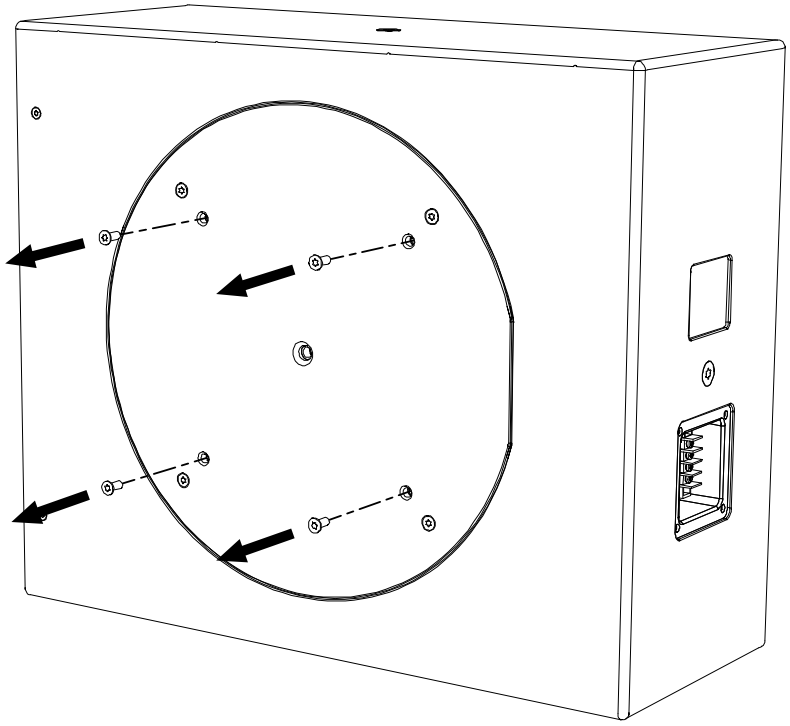

Figure 4.3.2 - Remove the M6 screws

4.4 Preparing the WHF wall mount flat

NOTE

Remove the two screws at the WHF wall mount flat.

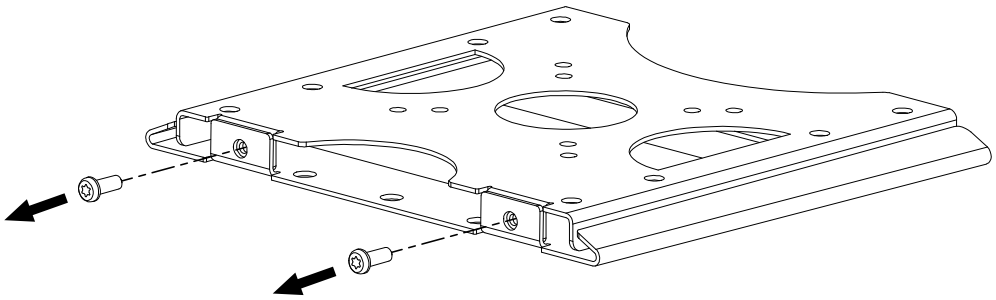

Figure 4.4.1 - Remove the two screws

NOTE

Remove the loudspeaker sheet metal.

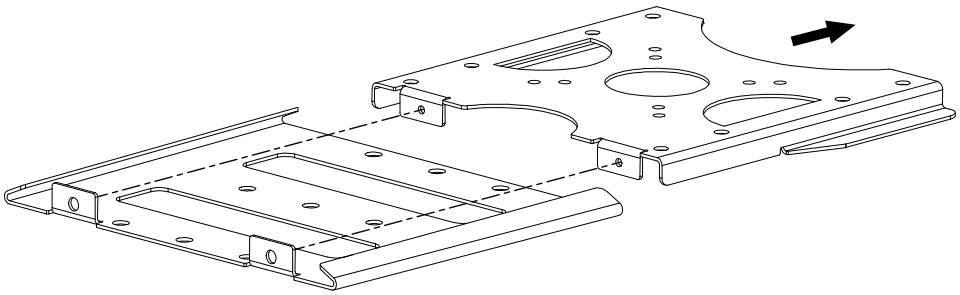

Figure 4.4.2 - Remove sheet metal

4.5 Mounting the speaker plate to the subwoofer

WARNING

Attach the loudspeaker plate (see figure 2.1, item 7) of the WHF wall mount flat to the subwoofer. Use the pan head screws with flange (see figure 2.1, item 2) from our scope of delivery.

Tighten the screw sufficiently! (18 Nm)

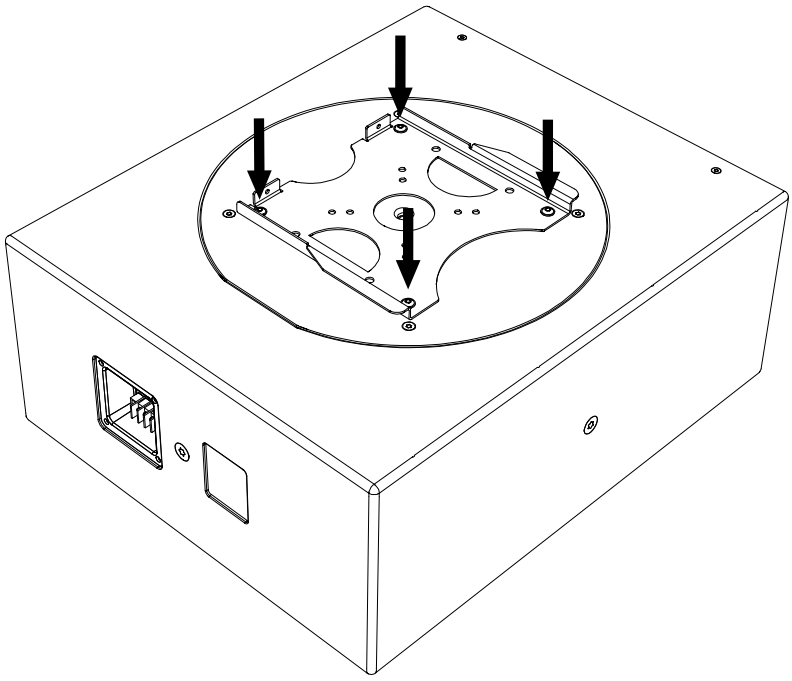

Figure 4.5 - Attach loudspeaker plate at loudspeaker

4.6 Mounting the centering as well as pressure plate to the subwoofer

WARNING

1. First place the centering plate (see figure 2.1, item 5) into the large center hole of the loudspeaker plate that is already attached to the subwoofer.
2. Place the pressure plate on top (see figure 2.1, item 4) and screw the two plates together using the hexagon head screw (see figure 2.1, item 1).
3. Tighten the screw sufficiently! (18 Nm)

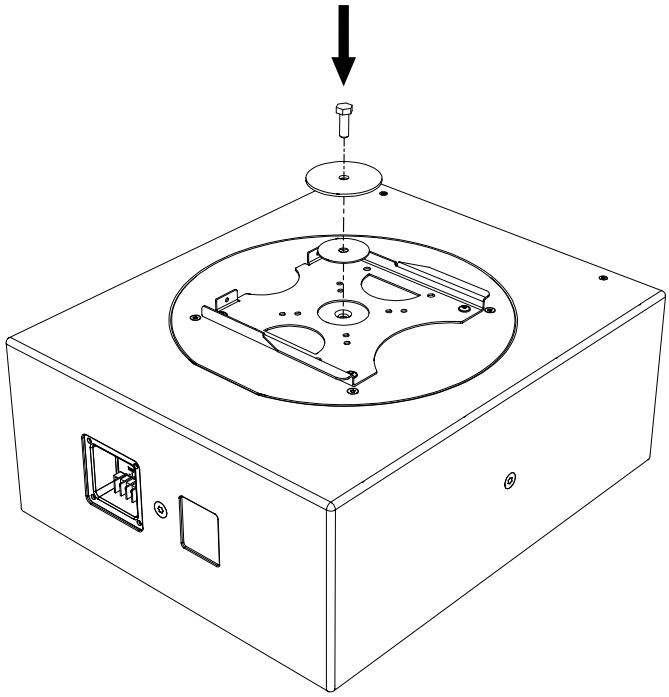

Figure 4.6 - Attach centering plate and pressure plate to the subwoofer

4.7 Mounting the wall plate to different construction forms of a wall

WARNING

When attaching the wall plate (see figure 2.1, item 6), follow the instructions from chapter 1 - Safety / Intended use.

WARNING

In addition, observe the following instructions for attaching the wall plate (see figure 2.1, item 6):

1. To fix the wall plate to a concrete or brick wall, use the BZ holes (see figure 4.7). Make sure that all four mounting holes BZ are used!

2. To fix the wall plate to a lightweight wall, use the holes L (see figure 4.7). Make sure that all three mounting holes L are used!

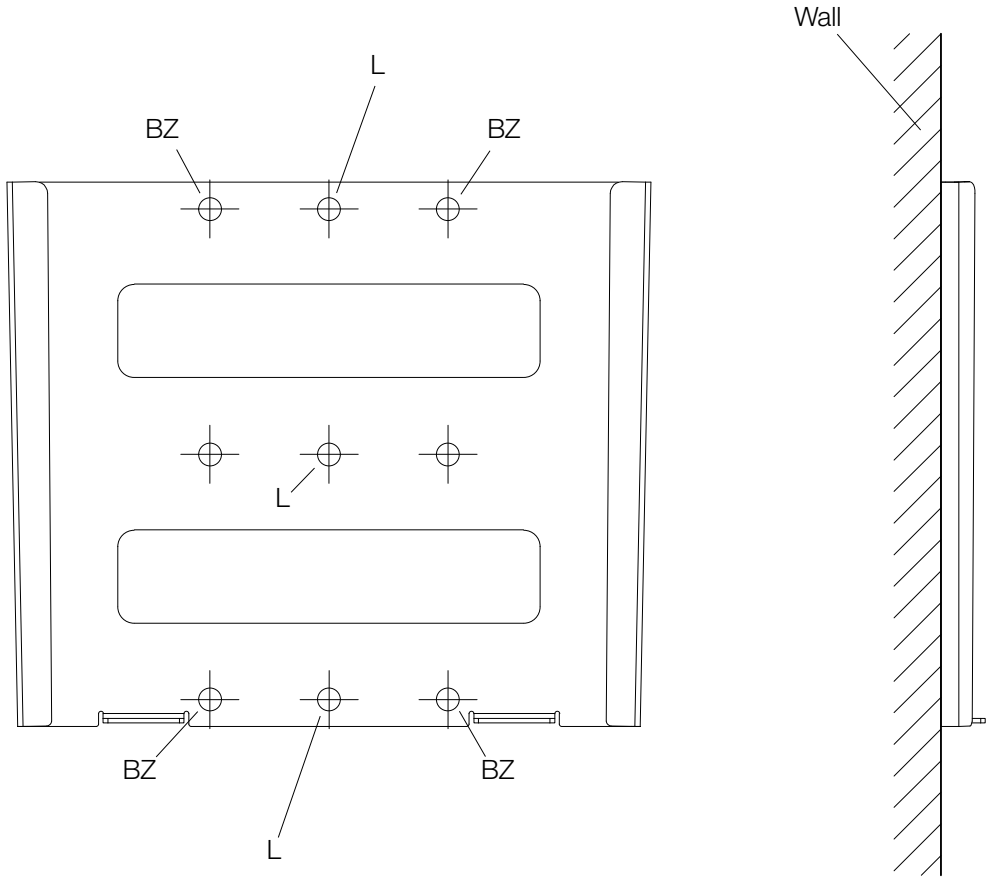

Figure 4.7 - Hole descriptions

4.8 Hang loudspeaker on wall

WARNING

Carefully insert the loudspeaker plate on the subwoofer into the wall plate attached to the wall.

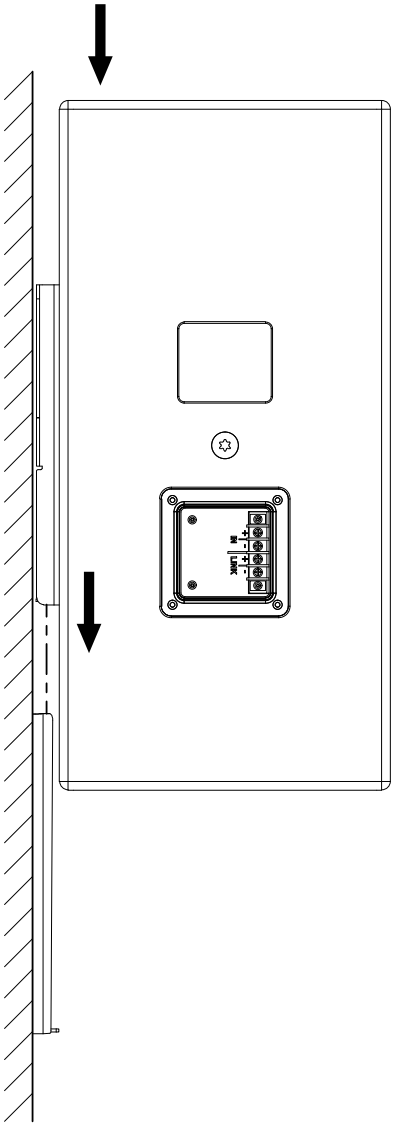

Figure 4.8 - Insert loudspeaker plate with loudspeaker into wall plate

4.9 Screwing the plates of the WHF

WARNING

Screw the two plates of the WHF wall mount flat using the two pan-head screws (see Figure 2.1, item 3). Use an extension for the bit insert for this purpose.

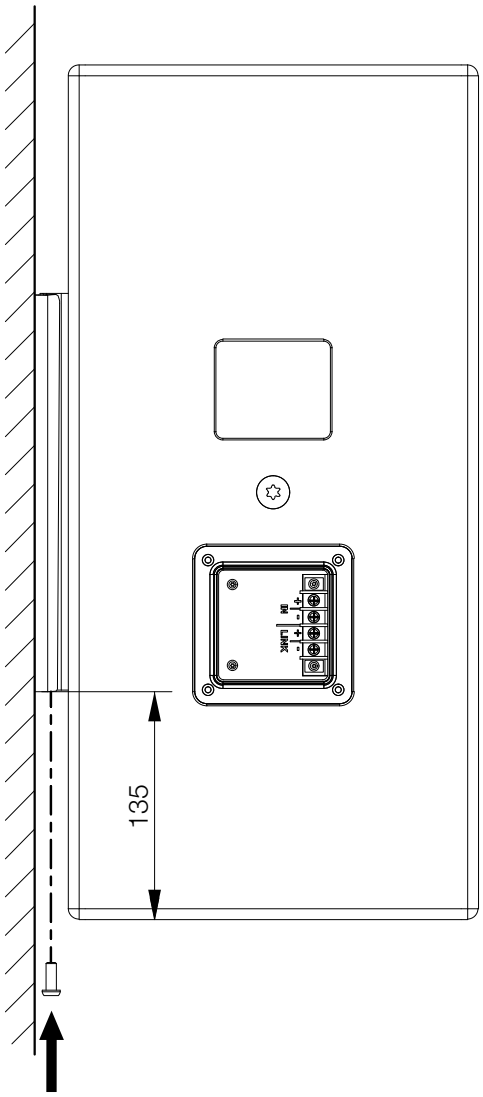

Figure 4.9 - Setting the screws

5. Transport and storage

NOTE

Ensure that the surfaces of the parts of the wall mount flat are not damaged during transport and storage. Moisture may penetrate where steel surfaces are exposed by scratches and result in corrosion.

This is why the products should be transported in a safe, careful, dry and largely dust-free manner.

6. CE Conformity Declaration

Copy and translation of the original CE Conformity Declaration:

We hereby declare that the below-referenced components by virtue of their design and construction, and in the configuration placed on the market by us, satisfy the safety and health requirements of the applicable EC directives. This declaration becomes invalid in case of modifications that have not been approved by us.

This declaration applies to the following components

• WHF

as well as all model variants based on these, provided that they correspond to the original factory models and have not been technically modified in any way.

Applicable directives:

• 2001/95/EG

Applicable national standards and technical specifications:

• DIN EN 18800
• DIN EN ISO 12100
• DGUV Vorschrift 17 und 18

Ludwigsburg, Germany, January 1st, 2021

Bernhard Wüstner

7. Disposal

If you have any question regarding the disposal of used devices, please contact us under the following telephone number:

+49 (0) 71 41 - 48 89 89 0

In countries outside of the European Union, comply with local regulations.

TW AUDiO INTERNATIONAL GmbH
Osterholzallee 140-2
71636 Ludwigsburg
Germany

Phone: + 49 (0) 71 41-48 89 89 0
Fax: + 49 (0) 71 41-48 89 89 99
E-Mail: info@twaudio.de
WWW: www.twaudio.de