TWAUDIO®

VERA20i

Operation manual

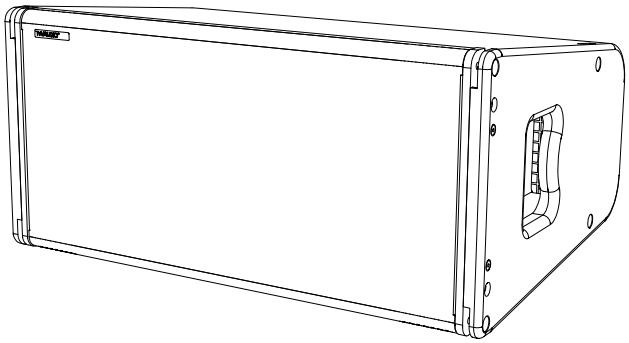

Introduction

Thank you for choosing a high-quality product “MADE IN GERMANY” from the brand TWAUDiO.

The VERA20i loudspeaker is equipped with two 10” chassis for the low-mid frequencies and a newly developed waveguide with an 1,4” mid-high compression driver. Measuring just 60 cm in width, the loudspeaker forms part of a vertical array up to 24 elements.
Compared with typical double 8” systems, the VERA20i‘s two 10” drivers are able to reproduce up to 6 dB more output in the low-mid frequency range with lower distortion.

The newly developed 1,4” compression driver and waveguide are reproducing a smooth and accurate midrange response for natural vocal and music reproduction. The low frequency crossover point around 1 kHz guarantees a precise and uniform coverage even in the sensitive transition range. The extraordinarily fast transient response replays the high frequencies in a very detailed and crispy way.

The compact and appealing design of the enclosure allows a subtle presentation of the VERA20i. Especially when sightlines have to be considered or an array needs to be fitted unobstrusively within the architectural surrounding.

The fully integrated, nearly invisible installation four-point rigging hardware support the discreet optical aspect. A special feature is the logarithmic scaling of the intermediate angles between angles. It enables angles smaller than one degree to achieve a more accurate directivity of the upper array elements over a longer distance. In addition costs for expensive pins and additional frames between subwoofer and tops do not apply.

If you lend your product to another party, inform that party of the safety-related operating procedures and hand over this assembly guide. If you require additional copies of this manual, you can obtain them free of charge from TWAUDiO or download them from www.twaudio.de

Instructions in this user manual

Strictly adhere to the instructions contained in this operating manual that are marked as follows:

This symbol in combination with the signal word “Warning” identifies a potentially hazardous situation. Failure to comply with this safety instruction can lead to serious injury or even death.

This symbol in combination with the signal word “Warning” identifies a potentially hazardous situation for persons with a pacemaker. Failure to comply with this safety instruction can lead to serious injury or even death.

CAUTION

This symbol in combination with the signal word “Caution” identifies a potentially hazardous situation. Failure to comply with this safety instruction can lead to light or moderate injury.

NOTE

This symbol in combination with the signal word “Note” identifies a potentially hazardous situation. Failure to comply with this safety instruction can lead to product damage.

TIP

This symbol in combination with the signal word “Tip” identifies additional information or notes that will simplify working with TW AUDiO products on the basis of practical experience.

Notes on the products

Read manual before use!

Before using the device, carefully read the operating manual and keep it with the VERA20i loudspeaker.

General information

Operation manual: OM-VERA20i
Version EN_4-0, 23.07.2026
© by TW AUDiO INTERNATIONAL GmbH 2026; all rights reserved.

All information contained in this operating manual was correct to the best of our knowledge at the time of printing.

Quality warranties or assurance of suitability for a certain type of use based on the technical specifications, dimensions and weights are not granted by TW AUDiO.

TW AUDiO also shall not assume liability for any secondary damage (property damage and/or personal injury) nor for the failure to comply with this operating manual!

TW AUDiO reserves the right to update this document based on recent developments.

TW AUDiO INTERNATIONAL GmbH
Osterholzallee 140-2
71636 Ludwigsburg
Germany

Phone : + 49 (0) 71 41-48 89 89 0
Fax: + 49 (0) 71 41-48 89 89 99
E-Mail: info@twaudio.de
WWW: www.twaudio.de

Content

1. Safety | Intended use 5
2. Overview 7
2.1 Components 7
2.2 Variants - horizontal coverage 8
2.3 Exchanging the horn flanges 9
3. Technical specifications 10
3.1 Data sheet 10
3.2 Connection diagram 10
4. Commissioning 11
4.1 Setup 11
4.2 Rigging VERA20i 11
4.3 Connection options 12
4.4 Operation 12
4.5 Connecting the cable 13
5. Transport and Storage 14
6. CE Conformity Declaration 14
7. Disposal 15

1. Safety | Intended use

Please adhere to the following safety instructions to avoid risks when operating loudspeakers.

The VERA20i loudspeaker was developed for use in professional sound systems. The loudspeaker may only be used by trained and qualified personnel.

Note the operating modes described in this operating manual. Other uses are not permissible.

Damage caused by improper use is not covered by TW AUDiO.

WARNING

Loudspeakers generate an electromagnetic field. Persons with pacemakers are not permitted to remain in the immediate vicinity of loudspeakers as the electromagnetic fields can cause pacemakers to malfunction.

WARNING

When working with heavy loads exceeding 20 kg (44 lbs.), use suitable aids (dollies, hoisting slings, etc.). Multiple persons may be required depending on the situation.

Ensure that the units are in a stable position and are firmly attached. A falling loudspeaker can result in serious personal injury and property damage.

When using and assembling TW AUDiO loudspeakers, only use materials specified by TW AUDiO. These tasks must be performed by qualified personnel. Adhere to the applicable safety regulations.

NOTE

When setting up loudspeakers, ensure that they are not exposed to the following ambient conditions:

- Direct sunlight
- Humidity
- Jolting
- Dust

WARNING

Keep away from the immediate vicinity of loudspeakers that are operated at high sound pressure levels. These loudspeaker systems are capable of endangering your health. Sound levels beginning as low as approximately 90 dB SPL can lead to long-term hearing impairment.

NOTE

Avoid:

- Feedback
- Distorted signals (clipping) and
- Peaks resulting from switching on devices, plugging in devices or unplugging devices during operation.

Such signals can lead to loudspeaker overload and ultimately to loudspeaker failure.

WARNING

Ensure that the loudspeaker is not exposed to permanent thermal overloads. Thermal overloads may cause a fire and result in serious personal injury and property damage.

Note that TW AUDiO does not provide a warranty for damage that can be attributed to this type of overload and therefore cannot be held liable for any secondary damage.

NOTE

A permanent magnetic field is present in the immediate vicinity of loudspeakers. Ensure that objects which react sensitively to magnetic fields are not located in the immediate vicinity of the loudspeaker. In particular, this applies to magnetic storage media, magnetic stripe cards such as debit cards and CRT displays. A distance of approximately one meter is sufficient to avoid damage.

NOTE

Check loudspeakers and accessory parts regularly for visible wear. This is essential to ensure continuing fault-free operation. Worn parts should be replaced immediately. Spare parts are available from TW AUDiO.

2. Overview

2.1 Components

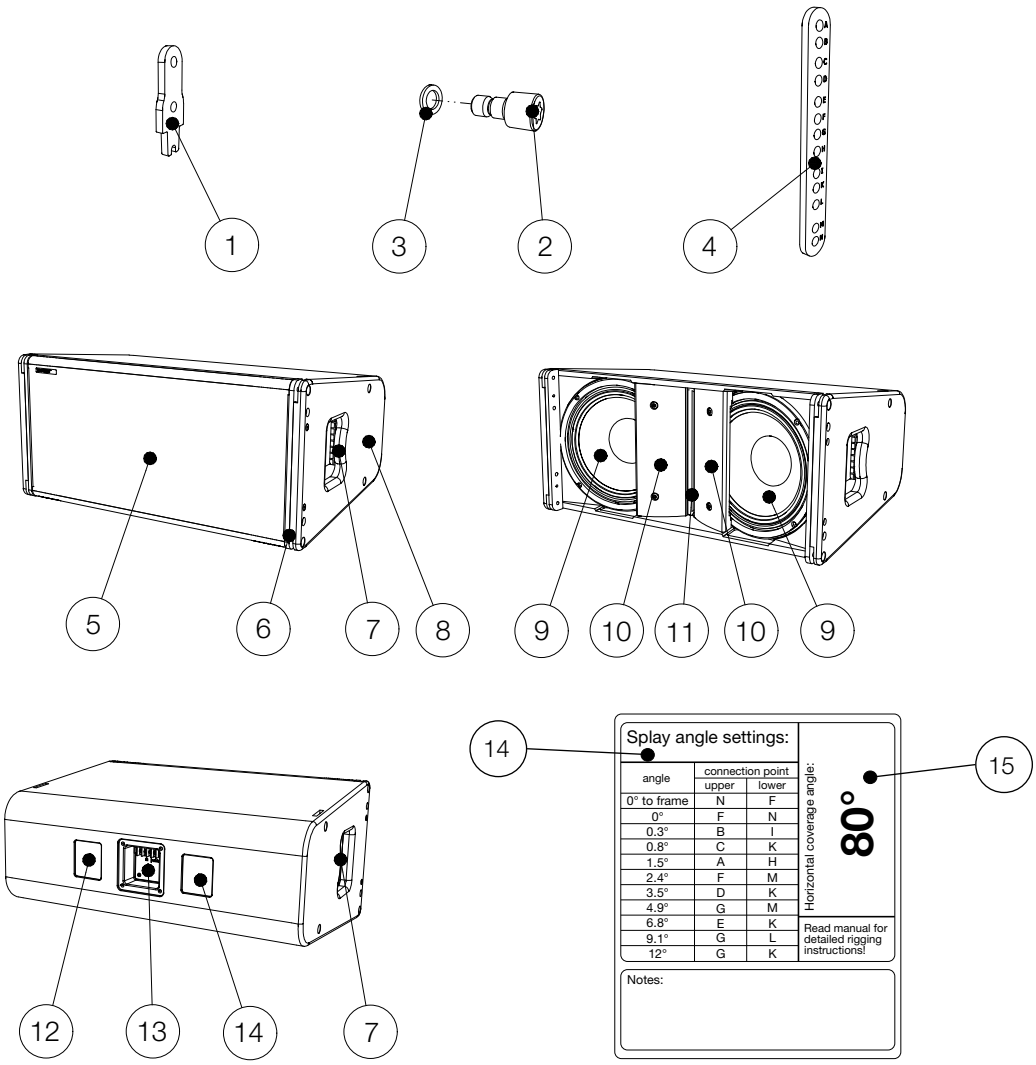

Figure 2.1 - Overview

1. Splay link (2 pieces) – enclosed separately
2. Hexagon socket head cap screw M8x16-12.9 (9 pieces) – enclosed separately
3. Lock washer VS-8-1.4301 (9 pieces) – enclosed separately
4. Link (2 pieces) – enclosed separately
5. Front grill
6. Rigging track (2 pieces)
7. Carrying handle
8. Multiplex enclosure - Polyurea surface finish
9. 10“ cone driver
10. Horn flanges
11. Waveguide with 1,4“ compression driver
12. Type label
13. Standard i-series screw terminal
14. Info label
15. Field for horizontal coverage

2.2 Variants - horizontal coverage

The VERA20i loudspeaker can optionally be equipped with 80° or 120° horn flanges. The angle specification refers to horizontal coverage. Check the info label to identify the VERA20i variant (see figure 2.1 – Position 14).

TIP

As standard setting an information label will be placed on the VERA20i loudspeaker after assembly. Depending on the application it might be useful to adapt the dispersion of the loudspeaker by changing the horn flares. In this case an additional label is enclosed which has to be placed over the original information label (figure 2.1- pos.14 and pos.15). This label can be removed again when necessary.

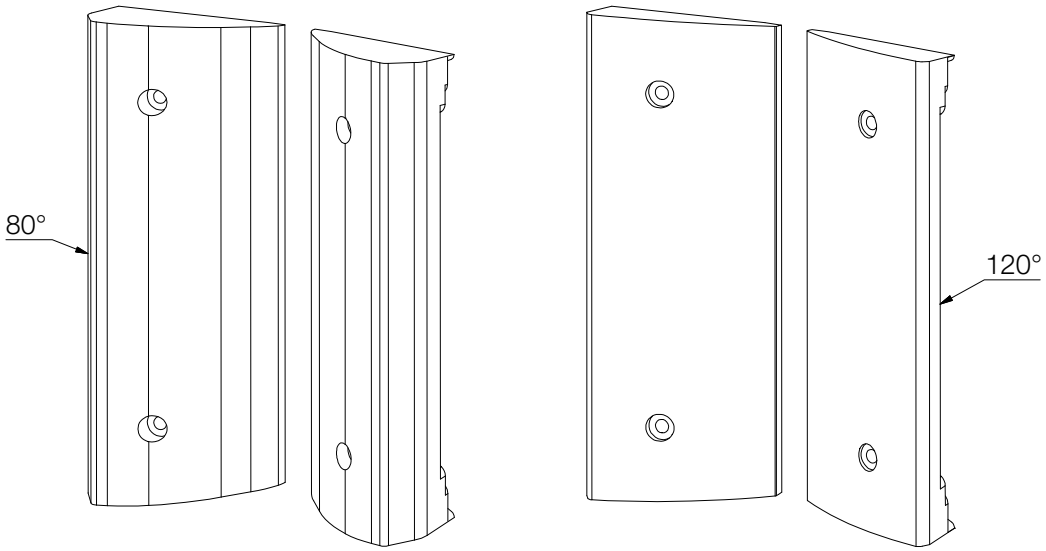

Figure 2.2 - VERA20i horn flange variants

2.3 Exchanging the horn flanges

Depending on the product version, the loudspeaker is shipped with either 80° or 120° horn flanges (see chapter 2.2) installed. For applications that require a different horizontal coverage, it may be advantageous to change the horn flanges.

To do so, proceed as follows:

1. Place the VERA20i loudspeaker on its back, with the speaker grille facing up. Make sure to place the speaker on a clean, non-slippery surface. To secure the speaker against lifting and slipping, ask a second person for assistance.

2. To remove the speaker grill a hexalobular key with the size of TX50 is required. Use it to remove the four mounting screws on the left and right side of the speaker housing.

3. Loosen the two screws on each horn flange.

4. Carefully pull the horn flanges upwards.

NOTE

5. Carefully insert the new horn flanges. Screw them to the housing. Take care not to damage the chassis with the screws.

6. Reattach the grill and screw it tight.

3. Technical specifications

3.1 Data sheet

	Variante	
	VERA20i-80	VERA20i-120
Drivers	2x 10“ LF / 1x 1,4“ HF	
Frequency response	63 - 18000 Hz	
Power handling (program/Peak)	1000 / 2000 W	
Impedance	8 Ω	
Coverage (h x v)	80° x 12°	120° x 12°
Max. SPL / 1m	139 dB	
Dimensions (h x w x d)	280 x 600 x 400 mm [11,02 x 23,62 x 15,75 in]	
Weight	25,2 kg [55,556 lbs]	
Surface	Polyurea coating	

3.2 Connection diagram

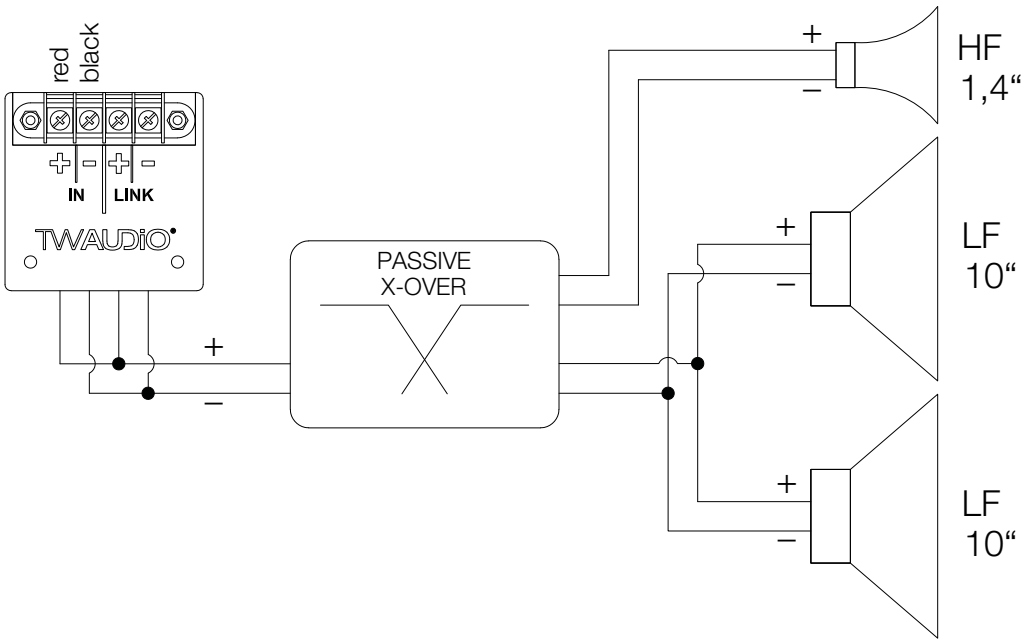

Figure 3.2 - Connection diagram

4. Commissioning

4.1 Setup

The VERA20i loudspeaker is designed for horizontal operation in stacked and flown vertical arrays. TW AUDiO provides a wide range of accessories to securely attach the loudspeaker.

WARNING

Make sure that all system structures are located on a firm, level surface and that the surface can bear the total weight!

WARNING

Make sure the speakers are securely fastened to prevent personal injury and property damage.

NOTE

TW AUDiO recommends using only the accessories specified by TW AUDiO for securing and mounting loudspeakers.

4.2 Rigging VERA20i

VERA20i series line arrays can include VERA20i and/or VERA S17i loudspeakers or VERA S32i loudspeakers.

WARNING

In order to connect the VERA20i loudspeakers mechanically with each other, the rigging tracks and brackets have to be used. They are positioned to the left and right (figure 2.1 - pos.6 and pos.1 and pos.4) and also via the brackets on the sides.

NOTE

Please refer to the VERA RF600i manual for operating modes and set-up options.

TIP

EASE® Focus simulation software can be used to plan VERA20i line arrays. EASE® Focus is available as a free download from the TW AUDiO website at www.twaudio.com.

4.3 Connection options

The VERA20i loudspeaker is equipped as standard with the i-series screw terminal.

NOTE

As options there can be mounted a panel with cable gland (CG-option) or a panel with two built-in speakON® jacks (SO-option).

Furthermore, a blind cover option is available.

All connection options are only available in black colour.

NOTE

More information about the different connection options can be found in the respective operating instructions in the download area on the homepage of TW AUDiO.

4.4 Operation

Operation of the VERA20i loudspeaker requires a DSP-Controller. For this purpose, only presets developed by TW AUDiO are recommended. The TW AUDiO system racks are ideally suited for this purpose.

NOTE

Before connecting the loudspeaker to the amplifier, ensure that the right preset has been loaded.

Using a wrong, out dated or a preset not provided by TW AUDiO can lead to destruction of the speaker.

NOTE

Make sure that the amplifier's specifications meet the requirements. Using an amplifier that doesn't meet the specifications can destroy the loudspeaker.

Please note the technical data in section 3.1 on page 10.

4.5 Connecting the cable

To create a cable connection with an amplifier rack from TW AUDiO, proceed as follows.

NOTE

Ensure that the cable cross sectional area is sufficient (at least 1.5 mm^2) to avoid power losses. TW AUDiO recommends using the loudspeaker cables available from TW AUDiO.

When connecting the cables to the loudspeaker, ensure that polarity (+/-) and pin assignment (1/2) are correct. Incorrect connection can lead to a significant change in the loudspeaker's sound characteristics and may damage the driver.

The pin connections of the VERA20i loudspeaker can be found in section 3.2 ("Connection diagram") on page 10.

The internal wiring of the VERA20i loudspeaker allows for parallel connection of multiple loudspeaker units.

Please note that parallel connections will decrease the total impedance of your loudspeaker configuration.

The total impedance and the resulting power of the speaker configuration must match the output power of the amplifier.

5. Transport and Storage

NOTE

Ensure that the front grill of the loudspeaker is not damaged during transport and storage. Moisture can penetrate exposed wood surfaces and cause the wood to swell. A bent or broken front grill will no longer adequately protect the sensitive driver membranes.

In addition, larger dust deposits can significantly affect the functionality of a speaker membrane. This is why the product should be transported and stored in a safe, careful, dry and largely dust-free manner.

6. CE Conformity Declaration

Copy and translation of the original CE Conformity Declaration:

We hereby declare that the below-referenced components by virtue of their design and construction, and in the configuration placed on the market by us, satisfy the safety and health requirements of the applicable EC directives. This declaration becomes invalid in case of modifications that have not been approved by us.

This declaration applies to the following components

- VERA20i-80°
- VERA20i-120°

as well as all model variants based on these, provided that they correspond to the original factory models and have not been technically modified in any way.

Applicable directives:

- 2001/95/EG
- 2011/65/EU

Applicable national standards and technical specifications:

- DIN EN 18800
- DIN EN ISO 12100
- DGUV Vorschrift 17 und 18
- EN 50581: 2013-02

Ludwigsburg, Germany, January 1st, 2021

Bernhard Wüstner

7. Disposal

It is prohibited to dispose of used electrical equipment with household refuse.

All TWAUDiO INTERNATIONAL GmbH products are so-called B2B-products. This means that they are sold by a commercial business to a commercial business. TWAUDiO products that bear the trash can symbol shown here may only be disposed of by TWAUDiO.

The loudspeaker owner is legally responsible for proper disposal of used devices that do not bear this symbol. This pertains to all products delivered prior to March 29, 2010. Nevertheless, TWAUDiO will also be happy to assist you in this case.

If you have any question regarding the disposal of used devices, please contact us under the following telephone number:

+49 (0) 71 41 - 48 89 89 0

Thus, TWAUDiO is in strict compliance with the Waste Electrical and Electronic Equipment Directive (2012/19/EU) for the protection of our environment.

TWAUDiO INTERNATIONAL is registered under the following WEEE-reg.-no. with the German National Register EAR as a B2B-manufacturer and distributor of electrical devices:

DE93295191

In countries outside of the European Union, comply with local regulations.

TW AUDiO INTERNATIONAL GmbH
Osterholzallee 140-2
71636 Ludwigsburg
Germany

Phone: + 49 (0) 71 41-48 89 89 0
Fax: + 49 (0) 71 41-48 89 89 99
E-Mail: info@twaudio.de
WWW: www.twaudio.de