TWAUDIO®

VERA20

Operation manual

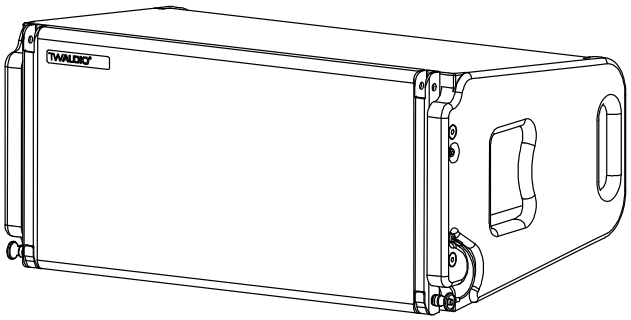

Introduction

Thank you for choosing a high-quality product “MADE IN GERMANY” from the brand TW AUDiO.

The VERA20 loudspeaker is equipped with two 10” chassis for the low-mid frequencies and a waveguide with a 1.4” mid-high compression driver. Compared with typical double 8” systems, the VERA20‘s two 10” drivers are capable of reproducing up to 6 dB more output in the low-mid frequency range with lower distortion.

Thanks to the loudspeaker’s width (only 60 cm / 23.62 inches) and height (28 cm / 11.02 inches), vertical arrays of up to 24 elements may be constructed.

The newly developed 1.4” compression driver and waveguide provides smooth and accurate midrange performance for natural vocal and music reproduction. The low frequency crossover point around 1 kHz guarantees precise and uniform coverage even in the sensitive transition range. The extraordinarily fast transient response ensures that high frequency reproduction is detailed and crisp.

The VERA20 implements an outstandingly innovative rigging hardware, allowing straightforward, fast and cost-efficient setup and dismounting by just one technician. A special feature is logarithmic scaling of the intermediate angles between angles. This allows for angle adjustment of less than one degree to achieve more accurate directivity of upper array elements over longer distances.

If you lend your product to another party, inform that party of the safety-related operating procedures and hand over this assembly guide. If you require additional copies of this manual, you can obtain them free of charge from TW AUDiO or download them from www.twaudio.de

Notes in the user manual

Strictly adhere to the instructions contained in this operating manual that are marked as follows:

This symbol in combination with the signal word “Warning” identifies a potentially hazardous situation. Failure to comply with this safety instruction can lead to serious injury or even death.

This symbol in combination with the signal word “Warning” identifies a potentially hazardous situation for persons with a pacemaker. Failure to comply with this safety instruction can lead to serious injury or even death.

This symbol in combination with the signal word “Caution” identifies a potentially hazardous situation. Failure to comply with this safety instruction can lead to light or moderate injury.

NOTE

This symbol in combination with the signal word “Note” identifies a potentially hazardous situation. Failure to comply with this safety instruction can lead to product damage.

TIP

This symbol in combination with the signal word “Tip” identifies additional information or notes that will simplify working with TW AUDiO products on the basis of practical experience.

Notes on the products

Read manual before use!

Before using the device, carefully read the operating manual and keep it with the VERA20 loudspeaker.

General information

Operation manual: OM-VERA20
Version EN_4-0, 23.07.2026
© by TW AUDiO INTERNATIONAL GmbH 2026; all rights reserved.

All information contained in this operating manual was correct to the best of our knowledge at the time of printing.

Quality warranties or assurance of suitability for a certain type of use based on the technical specifications, dimensions and weights are not granted by TW AUDiO.

TW AUDiO also shall not assume liability for any secondary damage (property damage and/or personal injury) nor for the failure to comply with this operating manual!

TW AUDiO reserves the right to update this document based on recent developments.

TW AUDiO INTERNATIONAL GmbH
Osterholzallee 140-2
71636 Ludwigsburg
Germany

Phone : + 49 (0) 71 41-48 89 89 0
Fax: + 49 (0) 71 41-48 89 89 99
E-Mail: info@twaudio.de
WWW: www.twaudio.de

Content

1. Safety | Intended Use 5
2. Overview 7
2.1 Components 7
2.2 VERA20 rear rigging 8
2.3 Variants - Horn flanges horizontal coverage 80° / 120° 8
3. Technical specifications 9
3.1 Data Sheet 9
3.2 Connection Diagram 9
4. Commissioning 10
4.1 Setup 10
4.2 Rigging VERA20 10
4.3 Exchanging the horn flanges 11
4.4 Operation 11
4.5 Connecting cables 12
5. Transport and Storage 13
6. CE Conformity Declaration 14
7. Disposal 15

1. Safety | Intended Use

Please adhere to the following safety instructions to avoid risks when operating loudspeakers.

The VERA20 loudspeaker was developed for professional use in sound systems. The loudspeaker may only be used by trained and qualified personnel.

Note the operating modes described in this operating manual. Other uses are not permissible.

Damage caused by improper use is not covered by TW AUDiO.

WARNING

Loudspeakers generate an electromagnetic field. Persons with pacemakers are not permitted to remain in the immediate vicinity of loudspeakers as the electromagnetic fields can cause pacemakers to malfunction.

WARNING

When working with heavy loads exceeding 20 kg (44 lbs.), use suitable aids (dollies, hoisting slings, etc.). Multiple persons may be required depending on the situation.

Ensure that the units are in a stable position and are firmly attached. A falling loudspeaker can result in serious personal injury and property damage.

When using and assembling TW AUDiO loudspeakers, only use materials specified by TW AUDiO. These tasks must be performed by qualified personnel. Adhere to the applicable safety regulations.

NOTE

When setting up loudspeakers, ensure that they are not exposed to the following ambient conditions:

- Direct sunlight
- Humidity
- Jolting
- Dust

WARNING

Keep away from the immediate vicinity of loudspeakers that are operated at high sound pressure levels. These loudspeaker systems are capable of endangering your health. Sound levels beginning as low as approximately 90 dB SPL can lead to long-term hearing impairment.

NOTE

Avoid:

- Feedback
- Distorted signals (clipping) and
- Peaks resulting from switching on devices, plugging in devices or unplugging devices during operation.

Such signals can lead to loudspeaker overload and ultimately to loudspeaker failure.

WARNING

Ensure that the loudspeaker is not exposed to permanent thermal overloads. Thermal overloads may cause a fire and result in serious personal injury and property damage.

Note that TW AUDiO does not provide a warranty for damage that can be attributed to this type of overload and therefore cannot be held liable for any secondary damage.

NOTE

A permanent magnetic field is present in the immediate vicinity of loudspeakers. Ensure that objects which react sensitively to magnetic fields are not located in the immediate vicinity of the loudspeaker. In particular, this applies to magnetic storage media, magnetic stripe cards such as debit cards and CRT displays. A distance of approximately one meter is sufficient to avoid damage.

NOTE

Check loudspeakers and accessory parts regularly for visible wear. This is essential to ensure continuing fault-free operation. Worn parts should be replaced immediately. Spare parts are available from TW AUDiO.

2. Overview

2.1 Components

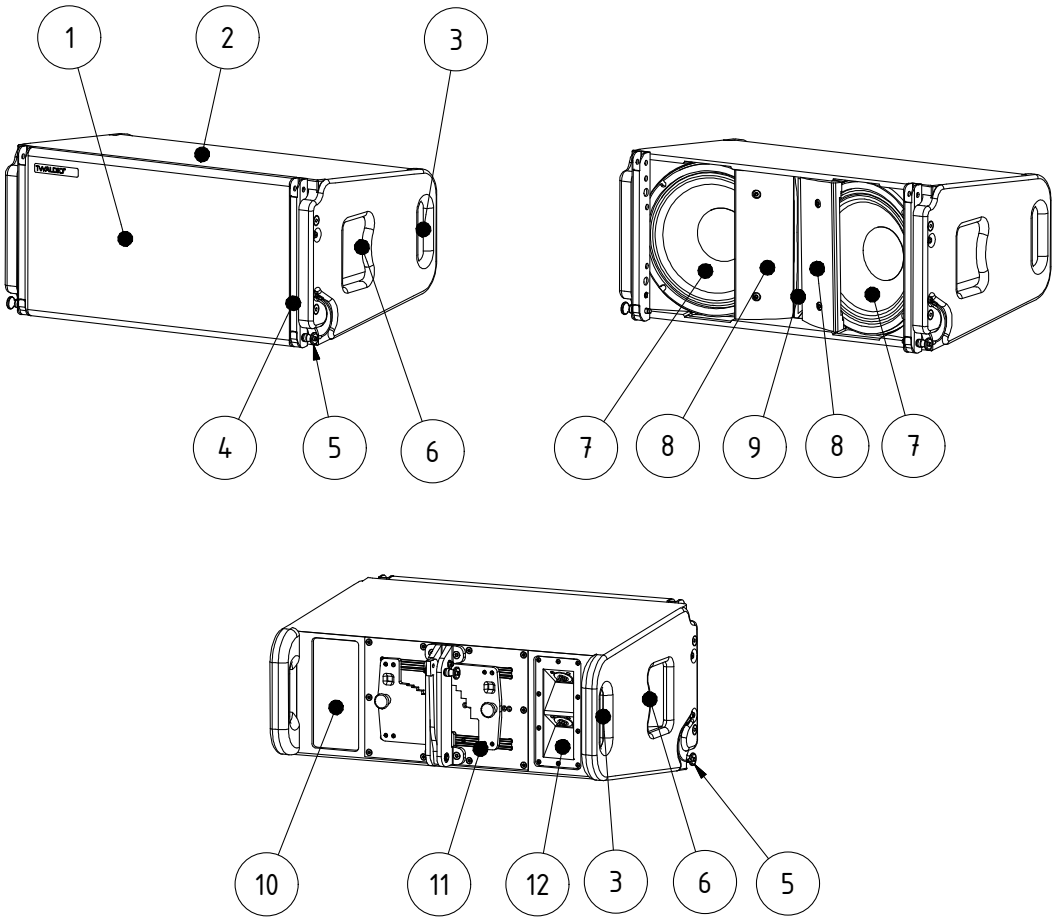

Figure 2.1 - Overview

1. Front grill
2. Multiplex enclosure - Polyurea surface finish
3. Carrying handles (rear, left and right)
4. Rigging track (2 pieces)
5. Locking pins (2 pieces)
6. Carrying handles (left and right)
7. 10“ cone driver
8. Horn flanges (2 pieces)
9. Waveguide with 1,4“ compression driver
10. Type label
11. VERA20 rear rigging (see chapter 2.2)
12. Connection panel with one SpeakON® socket each, top and bottom

2.2 VERA20 rear rigging

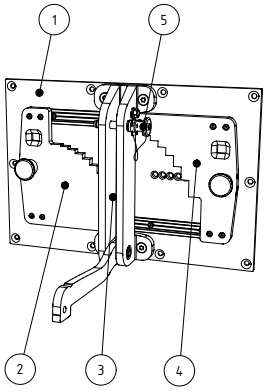

Figure 2.2 - rear rigging

1. Mounting plate with rails
2. left slider with locking pin
3. Main carrier with hook and spring mechanism
4. right slider with locking pin
5. Quick-locking pin

2.3 Variants - Horn flanges horizontal coverage 80° / 120°

The VERA20 loudspeaker can optionally be equipped with 80° or 120° horn flanges. The angle specification refers to horizontal coverage. Check the rear rigging to identify the VERA20 variant.

TIP

The factory installed horn flange type is marked on the VERA20's rear rigging. Depending on your application, it may be advantageous to change the horn flange. In this case, the identification mark on the rear rigging should also be changed. The factory marking can be removed using acetone.

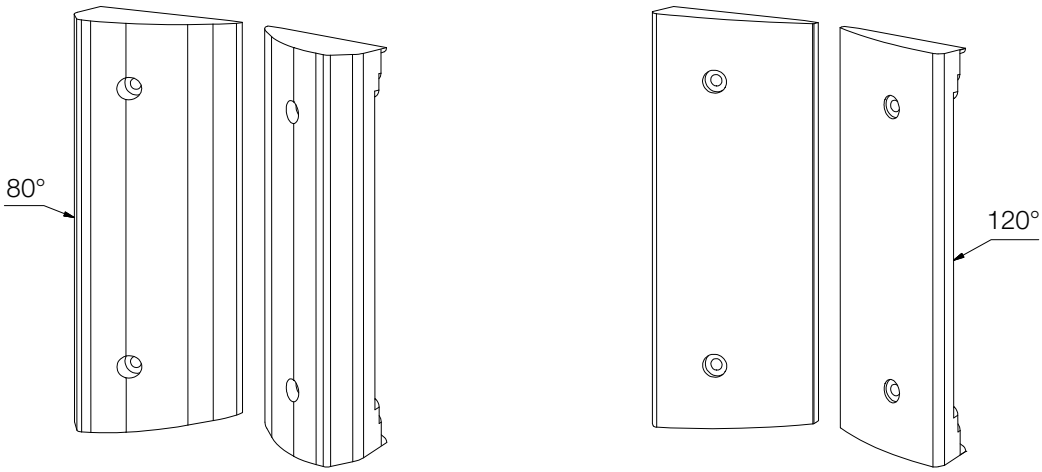

Figure 2.3 - VERA20 horn flange variants

3. Technical specifications

3.1 Data Sheet

	Variant	
	VERA20-80	VERA20-120
Drivers	2x 10“ LF / 1x 1,4“ HF	
Frequency response	67 - 18000 Hz	
Power handling (program/Peak)	1000 / 2000 W	
Impedance	8 Ω	
Coverage (h x v)	80° x 12°	120° x 12°
Max. SPL / 1m	139 dB	
Dimensions (w x h x d)	600 x 280 x 400 mm (23.62 x 11.02 x 15.75 in)	
Weight	25,0 kg (55.12 lbs]	
Surface	Polyurea coating	

3.2 Connection Diagram

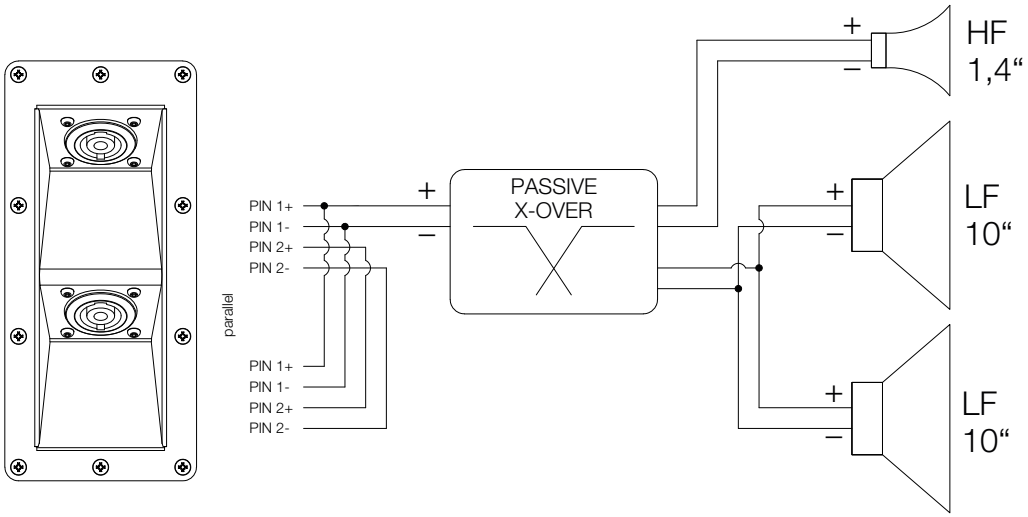

Figure 3.2 - Connection diagram

4. Commissioning

4.1 Setup

The VERA20 loudspeaker has been designed for horizontal operation in stacked and flown vertical arrays. TW AUDiO provides a wide range of accessories to securely attach the loudspeaker.

WARNING

Make sure that all system structures are located on a firm, level surface and that the surface can bear the total weight!

WARNING

Make sure the speakers are securely fastened to prevent personal injury and property damage. Secure stacked loudspeakers properly so that they can be tipped by 10° in any direction without toppling.

NOTE

TW AUDiO recommends using only the accessories specified by TW AUDiO for securing and mounting loudspeakers.

4.2 Rigging VERA20

VERA20 series line arrays can include VERA20 and/or VERA S32 loudspeakers.

WARNING

Note that the VERA20 loudspeakers are mechanically connected. This is done via the quick and easy 3-point rigging.

Also note that the VERA S32 loudspeakers are mechanically connected via 4-point rigging.

NOTE

Please refer to the VERA RF600, SFV20 and GSP20 manuals for operating modes and set-up options.

TIP

EASE Focus simulation software can be used to plan VERA20 line arrays. EASE Focus is available as a free download from the TW AUDiO website at www.twaudio.com.

4.3 Exchanging the horn flanges

Depending on the product version, the loudspeaker is shipped with either 80° or 120° horn flanges (see chapter 2.2) installed. For applications that require a different horizontal coverage, it may be advantageous to change the horn flanges. To do so, proceed as follows.

1. Place the VERA20 loudspeaker on its back, with the speaker grille facing up. The rear rigging lever must be opened. Make sure to place the speaker on a clean, non-slippery surface. To secure the speaker against lifting and slipping, ask a second person for assistance.

2. To remove the speaker grille a TX25 Torx wrench is required. Use it to remove the four mounting screws on the left and right side of the speaker enclosure.

3. Loosen the two screws on each horn flange.

4. Carefully pull the horn flanges upwards.

NOTE

5. Carefully insert the new horn flanges. Screw them to the enclosure.

Take care not to damage the chassis with the screws.

6. Reattach the front grill and screw it tight.

7. Change the marking of the installed horn flanges on the rear rigging.

4.4 Operation

Operation of the VERA20 loudspeaker requires a DSP-Controller. For this purpose, only presets developed by TW AUDiO are recommended. The TW AUDiO system racks are ideally suited for this purpose.

NOTE

Before connecting the loudspeaker to the amplifier, ensure that the right preset has been loaded.

Using a wrong, out dated or a preset not provided by TW AUDiO can lead to destruction of the speaker.

NOTE

Make sure that the amplifier's specifications meet the requirements. Using an amplifier that doesn't meet the specifications can destroy the loudspeaker.

Please note the technical data in section 3.1 on page 9.

4.5 Connecting cables

To create a cable connection with an amplifier rack from TW AUDiO, proceed as follows.

NOTE

Ensure that the cable cross sectional area is sufficient (at least 1.5 mm^2) to avoid power losses. TW AUDiO recommends using the loudspeaker cables available from TW AUDiO.

When connecting the cables to the loudspeaker, ensure that polarity (+/-) and pin assignment (1/2) are correct. Incorrect connection can lead to a significant change in the loudspeaker's sound characteristics and may damage the driver.

The pin connections of the VERA20 loudspeaker can be found in section 3.2 ("Connection diagram") on page 9.

The internal wiring of the VERA20 loudspeaker allows for parallel connection of multiple loudspeaker units.

Please note that parallel connections will decrease the total impedance of your loudspeaker configuration.

The total impedance and the resulting power of the speaker configuration must match the output power of the amplifier.

5. Transport and Storage

Due to the VERA20 loudspeaker weighing over 20 kg [44 lbs.], two persons are required to handle and transport the unit.

NOTE

To enable a single person to transport up to six VERA20 loudspeakers, TW AUDiO recommends using the VERA DLV20.

When transporting and storing the unit, it is important to ensure that the surface and front grill of the loudspeaker are not damaged. Moisture can penetrate through exposed wood surfaces and cause the wood to swell. A bent or broken front grill will no longer adequately protect the sensitive speaker membranes.

In addition, appreciable dust deposits may considerably impair the functionality of a loudspeaker membrane. For this reason, the loudspeakers should be transported and stored in a safe, careful, dry and largely dust-free manner.

The following accessory parts for transport and storage are available from TW AUDiO:

- VERA DLV20 (dolly)
- CoverV20 (protective cover)

The original packaging is unsuitable as permanent storage and transport packaging.

6. CE Conformity Declaration

Copy and translation of the original CE Conformity Declaration:

We hereby declare that the below-referenced components by virtue of their design and construction, and in the configuration placed on the market by us, satisfy the safety and health requirements of the applicable EC directives. This declaration becomes invalid in case of modifications that have not been approved by us.

This declaration applies to the following components

- VERA20-80
- VERA20-120

as well as all model variants based on these, provided that they correspond to the original factory models and have not been technically modified in any way.

Applicable directives:

- 2001/95/EG
- 2011/65/EU

Applicable national standards and technical specifications:

- DIN EN 18 800
- DIN EN ISO 12 100
- DGUV Vorschrift 17 und 18
- EN 50581: 2013-02

Ludwigsburg, Germany, January 1st, 2021

Bernhard Wüstner

7. Disposal

It is prohibited to dispose of used electrical equipment with household refuse.

All TW AUDiO INTERNATIONAL GmbH products are so-called B2B-products. This means that they are sold by a commercial business to a commercial business. TW AUDiO products that bear the trash can symbol shown here may only be disposed of by TW AUDiO.

The loudspeaker owner is legally responsible for proper disposal of used devices that do not bear this symbol. This pertains to all products delivered prior to March 29, 2010. Nevertheless, TW AUDiO will also be happy to assist you in this case.

If you have any question regarding the disposal of used devices, please contact us under the following telephone number:

+49 (0) 71 41 - 48 89 89 0

Thus, TW AUDiO is in strict compliance with the Waste Electrical and Electronic Equipment Directive (2012/19/EU) for the protection of our environment.

TW AUDiO INTERNATIONAL is registered under the following WEEE-reg.-no. with the German National Register EAR as a B2B-manufacturer and distributor of electrical devices:

DE93295191

In countries outside of the European Union, comply with local regulations.

TW AUDiO INTERNATIONAL GmbH
Osterholzallee 140-2
71636 Ludwigsburg
Germany

Phone: + 49 (0) 71 41-48 89 89 0
Fax: + 49 (0) 71 41-48 89 89 99
E-Mail: info@twaudio.de
WWW: www.twaudio.de