TWAUDiO®

SFV20

Assembly Instructions

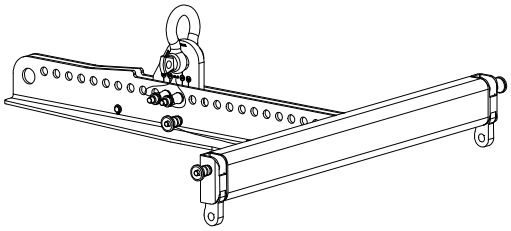

Introduction

Thank you for choosing a high-quality product “MADE IN GERMANY” from the brand TW AUDiO.

The SFV20 rigging frame is an accessory for the VERA20 loudspeaker.

It is characterized by a subtle look, a remarkable size to weight ratio and ease of use.

If you lend your product to another party, inform that party of the safety-related operating procedures and hand over this assembly guide. If you require additional copies of this manual, you can obtain them free of charge from TW AUDiO or download them from www.twaudio.de

Instructions in this setup manual

Strictly adhere to the instructions contained in this operating manual that are marked as follows:

This symbol in combination with the signal word “Warning” identifies a potentially hazardous situation. Failure to comply with this safety instruction can lead to serious injury or even death.

This symbol in combination with the signal word “Caution” identifies a potentially hazardous situation. Failure to comply with this safety instruction can lead to light or moderate injury.

This symbol in combination with the signal word “Note” identifies a potentially hazardous situation. Failure to comply with this safety instruction can lead to product damage.

This symbol in combination with the signal word “Tip” identifies additional information or notes that will simplify working with TW AUDiO products on the basis of practical experience.

Notes on the products

Read manual before use!

Before using the rigging frame, carefully read the assembly instructions and keep the instructions in a safe place together with the SFV20 rigging frame.

General Information

Assembly Guide: OM-SFV20
Version 2.1 d, 09/2024
© by TW AUDiO 2024; all rights reserved.

All information contained in this operating manual was correct to the best of our knowledge at the time of printing.

Quality warranties or assurance of suitability for a certain type of use based on the technical specifications, dimensions and weights are not granted by TW AUDiO.

TW AUDiO also shall not assume liability for any secondary damage (property damage and/or personal injury) nor for the failure to comply with this operating manual!

TW AUDiO reserves the right to update this document based on recent developments.

TW AUDiO INTERNATIONAL GmbH
Osterholzallee 140-2
71636 Ludwigsburg (Germany)

Phone : + 49 (0) 71 41-48 89 89 0
Fax: + 49 (0) 71 41-48 89 89 99
E-Mail: info@twaudio.de
WWW: www.twaudio.de

Table of contents

1. Safety | Intended use 5
2. Overview 7
2.1 Components 7
3. Technical specifications 8
3.1 Data sheet 8
4. Commissioning 9
4.1 Setup 9
4.2 Wind load 9
4.3 Secondary safety component 10
4.4 Preparing VERA20 loudspeaker for rigging 11
4.5 Using the VERA LA900 load adapter 14
4.6 Mounting the VERA20 loudspeaker 16
4.7 VERA20 setup from the second speaker set 21
4.8 Compression mode 29
5. Transport and Storage 30
6. CE Declaration of Conformity 31
7. Disposal 31

1. Safety | Intended use

Please adhere to the following safety instructions to avoid risks when using accessories.

The SFV20 rigging frame was developed for use in professional sound systems. The rigging frame may only be used by trained and qualified personnel.

Note the operating modes described in this assembly instructions. Other uses are not permissible.

Damage caused by improper use is not covered by TW AUDiO.

WARNING

Before each installation, check the integrity of the SFV20 rigging frame and ensure that all components are in perfect condition.

The scope of delivery includes specified quick-locking pins and a specified load adapter with shackle. Only use this components.

WARNING

The SFV20 rigging frame may only be used with the VERA20 loudspeaker.

These assembly instructions describe how to use the SFV20 rigging frame. Any other use shall be deemed improper and may result in damage or even injury.

Modifications or alterations to individual parts of the SFV20 rigging frame are not permitted! Danger to life!

WARNING

During and after each system setup, check that all quick-locking pins are always completely inserted! All quick-locking pins must always be used!

CAUTION

The SFV20 is an accessory designed both for indoor and outdoor use.

WARNING

The SFV20 rigging frame may only be used by trained and qualified personnel. Personnel must check the SFV20 for its full suitability before each use.

WARNING

When visible damage to any part of the SFV20 rigging frame is detected, it must be decommissioned immediately.

WARNING

Before mounting the SFV20 rigging frame, all attachment points - such as ceilings and cross-beams - must be checked for full load capacity and stability.

The SFV20 accessory is specified for a load of not more than nine VERA20 loudspeakers. This load capacity must never be exceeded!

WARNING

When working with heavy loads over 20 kg [44,09 lbs.], use suitable aids (dollies, hoisting slings, etc.). Multiple persons may be required depending on the situation.

WARNING

When moving (mounting, removing, servicing) the SFV20 rigging frame with VERA20 loudspeakers, ensure that there is enough room to avoid collisions with other objects.

CAUTION

When installing the SFV20 rigging frame, be careful not to pinch or twist the power cables or other cables of the VERA20 loudspeakers! The respective national electrotechnical regulations apply.

WARNING

Every time you install the SFV20 rigging frame, check all screw connections. Tighten all loose screws. If this is no longer possible, the screws must be replaced.

2. Overview

2.1 Components

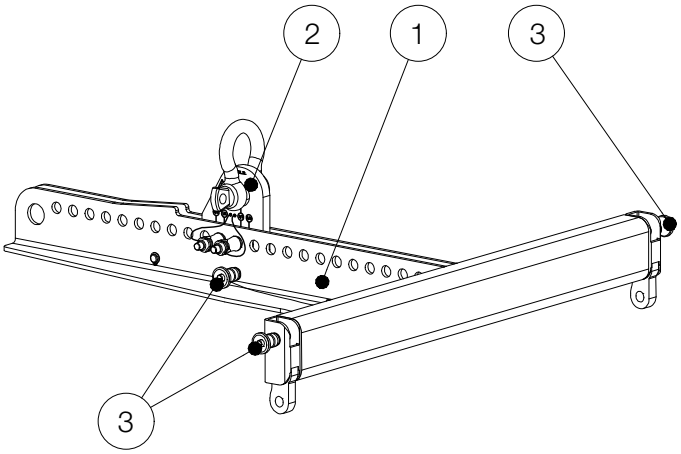

Figure 2.1 - Overview

1. SFV20 rigging frame - Surface powder-coated
2. VERA LA900 Load adapter with shackle
3. Captive Quick-locking pins

NOTE

When the SFV20 rigging frame is delivered from the factory, the quick-locking pins are in „Storage Position“.

3. Technical specifications

3.1 Data sheet

maximum load capacity	230 kg [507.1 lbs] at safety factor 10 before breacking point correspond to e.g. 9 VERA20 elements
Dimensions (h x w x d)	100 x 550 x 600 mm [3.94 x 21.65 x 23.62 in]
Weight	6,8 kg [15 lbs.]
Surface	Powder-coated
Maximum length of system setup, without subwoofer	2,70 m [8.86 ft.]

4. Commissioning

4.1 Setup

The SFV20 rigging frame is designed for hanging operation. TW AUDiO provides a wide range of accessories to securely attach the module to crossbeams, motor lifts, etc. in a suspended position.

WARNING

Please note that setting up the system setups always requires two persons!

NOTE

TW AUDiO recommends using only the accessories specified by TW AUDiO for securing and mounting the rigging frame.

4.2 Wind load

WARNING

Before setting up the system outdoors, consider unexpected wind conditions at the operation site!

Disassemble your system immediately when wind speeds exceed 8 bft (34 to 40 kn / 62 to 74 kph / 38.5 to 46 mph) and secure the system components!

Make sure that there are no persons in the immediate vicinity of the system structure!

WARNING

Make sure that the system structures are not operated over the audience at wind speeds in excess of 6 bft (22 to 27 kn / 39 to 49 kph / 24.2 to 30.45 mph) and that there are no persons in the immediate vicinity of the system structure!

4.3 Secondary safety component

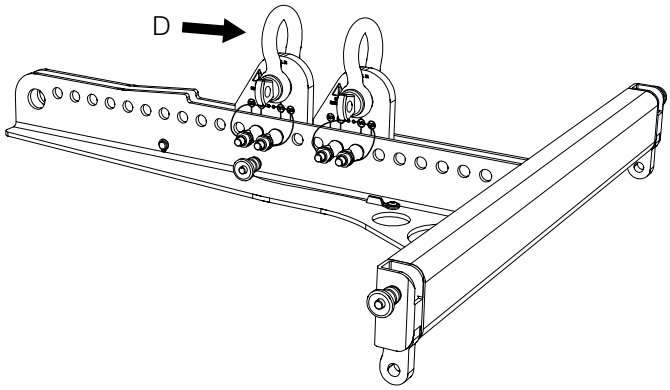

Figure 4.3.1 - Secondary safety component

NOTE

For the secondary safety component, the respective national electrotechnical regulations apply.

WARNING

For the second independent safety component, attach another VERA LA900 load adapter with shackle at point D to the rigging frame. Mount it directly behind the first load adapter.

Attach both VERA LA900 load adapter using two quick-locking pins each to the SFV20 rigging frame!

Secure the complete system, for example using safety chains!

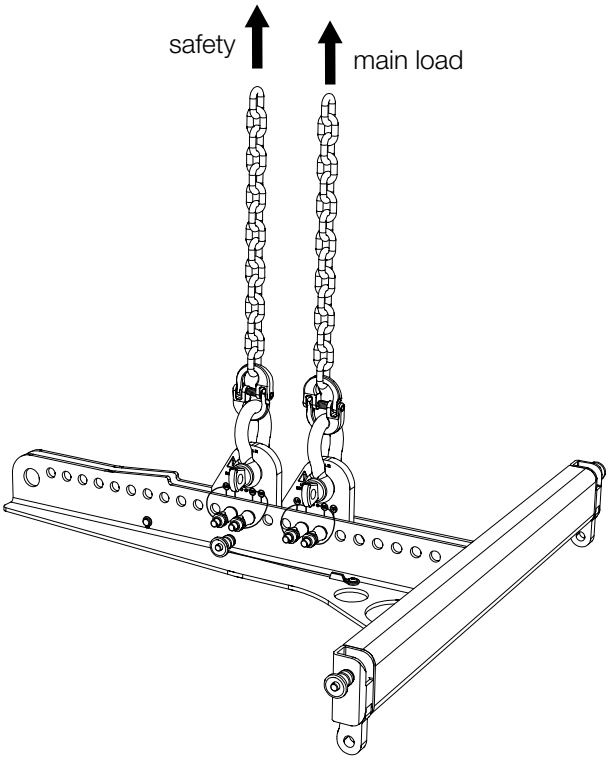

Figure 4.3.2 - Secondary safety component example

4.4 Preparing VERA20 loudspeaker for rigging

NOTE

1. Use the EASE Focus software to determine the number of VERA20 loudspeakers suitable for your application.

NOTE

2. Each VERA DLV20 transport dolly will hold four VERA20 loudspeakers. Provide the number of loaded transport dollies required for your application.
3. Do not remove the transport dolly covers before you have reached the operation site.

NOTE

4. Remove both quick-locking pins on the left and right of the upper VERA20 loudspeaker.
5. Lift off the top of the transport dolly.

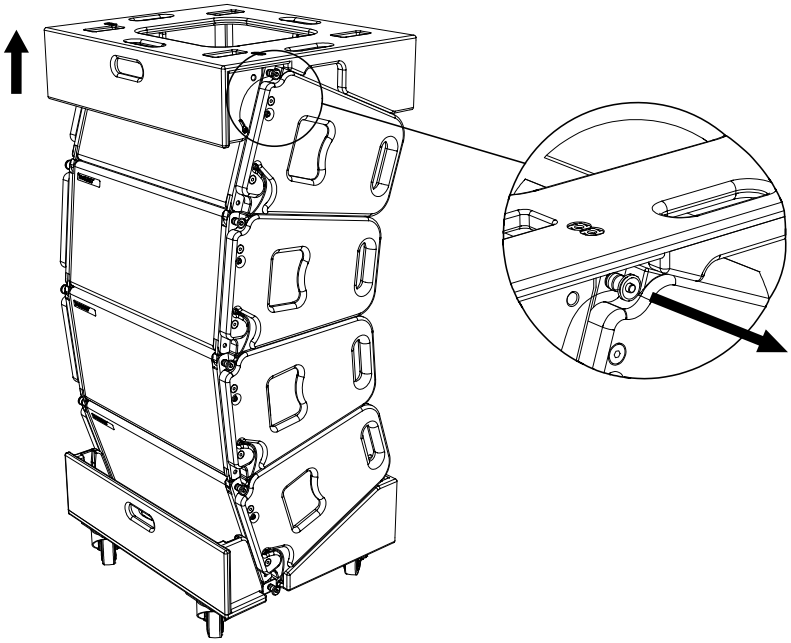

Figure 4.4.1 - VERA20 loudspeakers on VERA DLV20 transport dolly

WARNING

6. Check that all splay links are fully extended and that all quick-locking pins on both sides are always completely inserted!

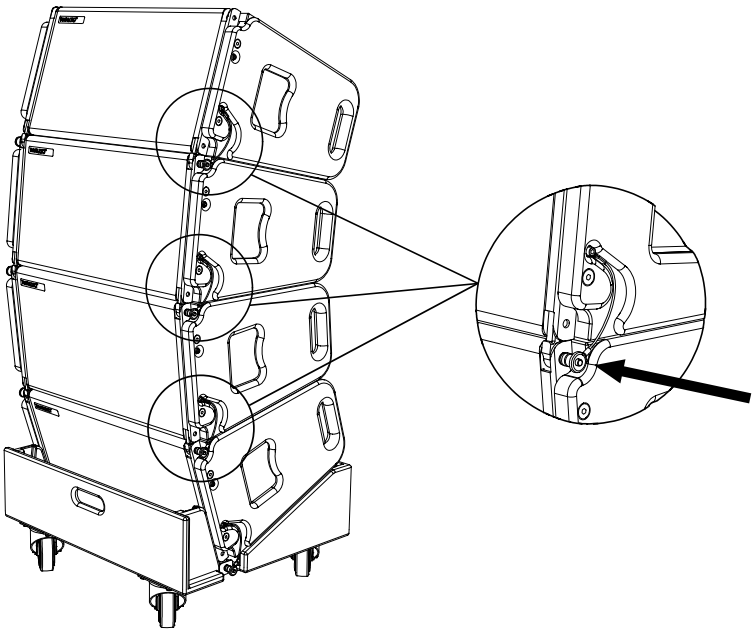

Figure 4.4.2 - VERA20 loudspeakers on VERA DLV20 transport dolly

NOTE

7. Use the EASE Focus software to determine the angle values suitable for your application.

WARNING

8. Move the right-hand sliders on all speakers to the previously determined angle value.
9. Check that all quick-locking pins are always completely inserted!

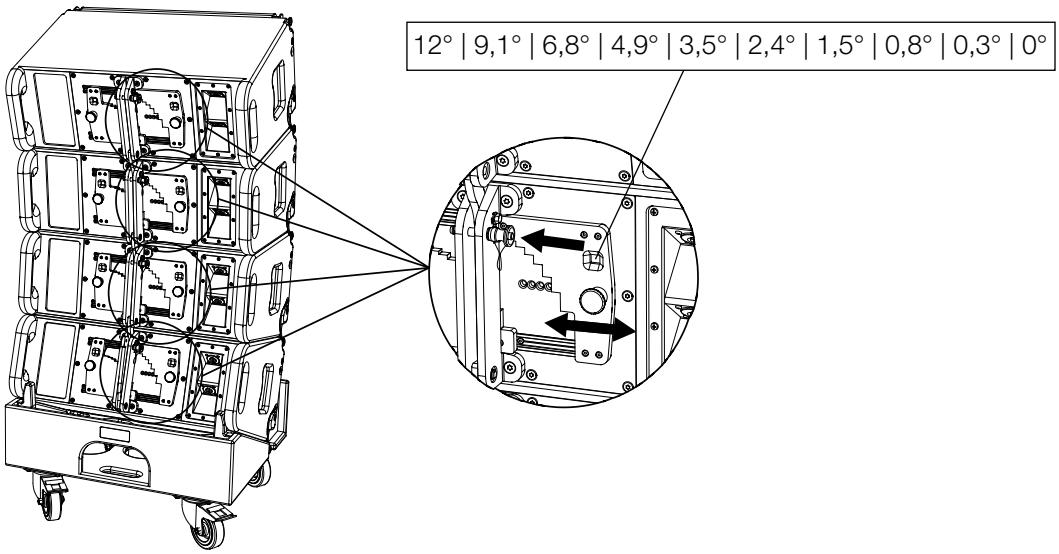

Figure 4.4.3 - Move all right sliders

4.5 Using the VERA LA900 load adapter

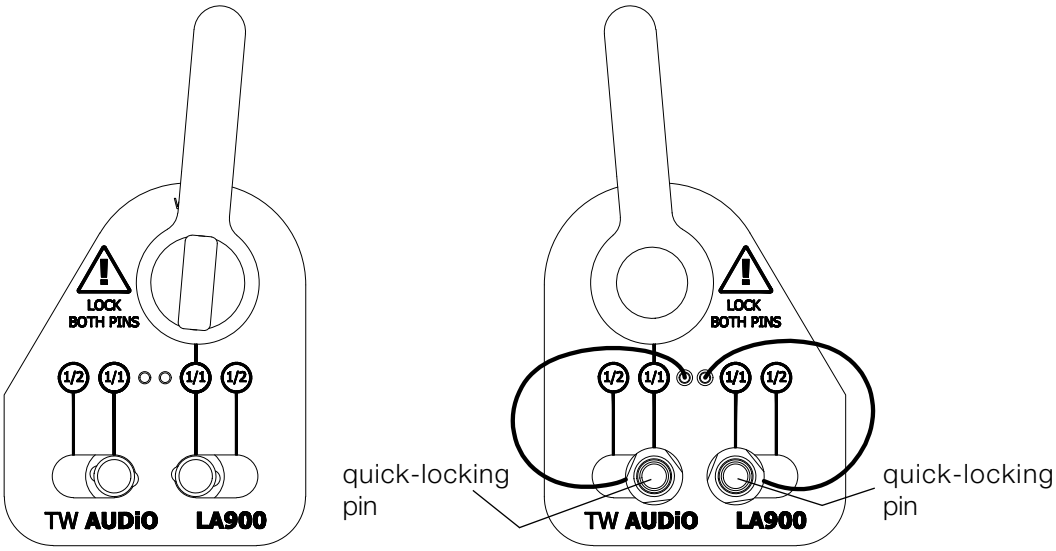

Figure 4.5.1 - VERA LA900 load adapter

WARNING

Two quick-locking pins are attached to the VERA LA900 load adapter.

Attach the VERA LA900 load adapter using both quick-locking pins to the SFV rigging frame!

NOTE

Use the EASE Focus software to determine the correct pin points for your application.

The VERA LA900 load adapter´s design allows for four different usage scenarios.

The two integrated slots allow both integer and half-integer settings.
The marker on the shackle on the VERA LA900 load adapter indicates the currently selected value. This can clearly be seen in figures 4.5.2 to 4.5.5.

The following illustrations show the different applications in an example:

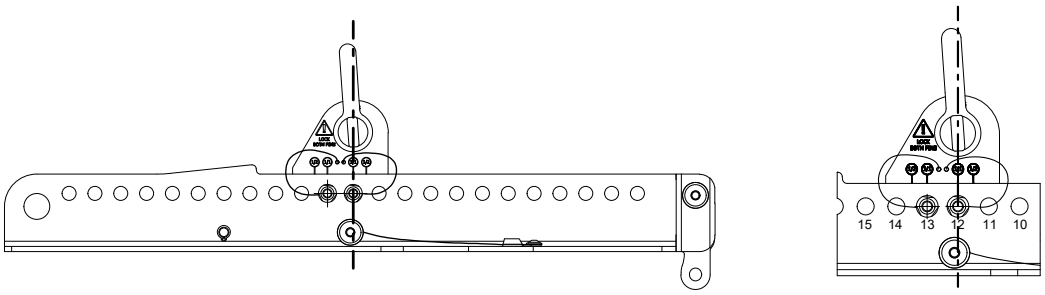

Figure 4.5.2 - VERA LA900 load adapter at pin point 12 - facing forward

For the forward-facing VERA LA900 load adapter, inserting quick-locking pins into 12 and 13 will result in 12 as the pin point.

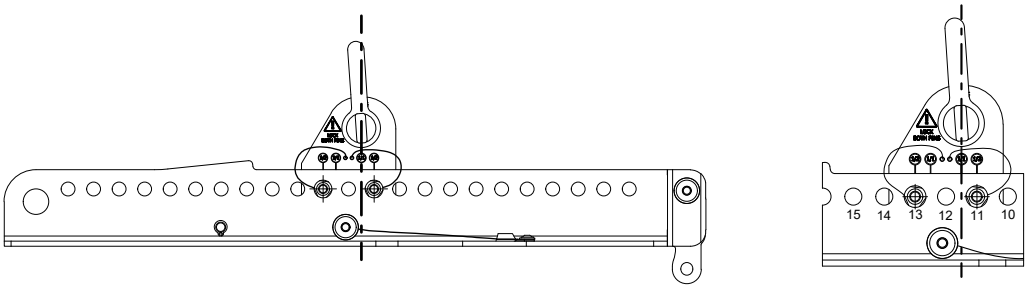

Figure 4.5.3 - VERA LA900 load adapter at pin point 11,5 - facing forward

Moving the quick-locking pin of the VERA LA900 load adapter from 12 to 11 results in 11,5 as the new pin point.

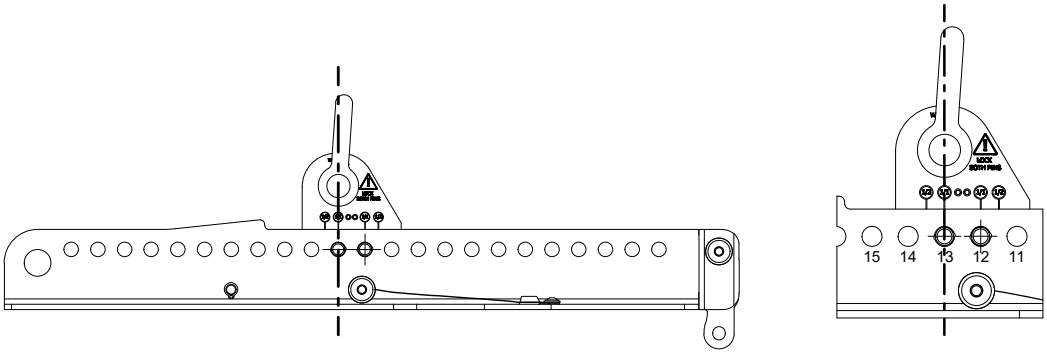

Figure 4.5.4 - VERA LA900 load adapter at pin point 13 - facing rearward

For the rearward facing VERA LA900 load adapter, inserting quick-locking pins into 13 and 12 will result in 13 as the pin point.

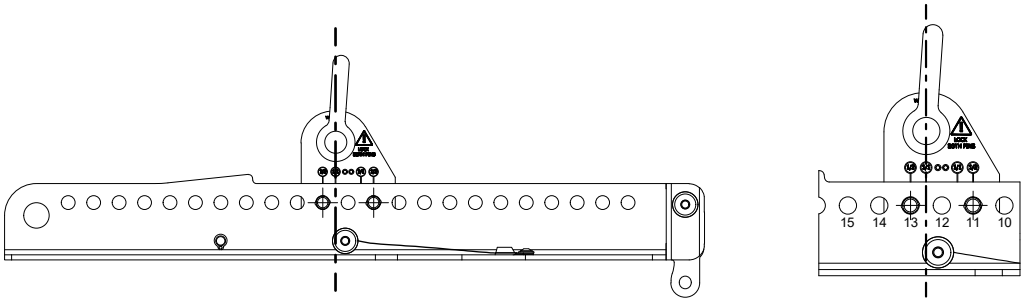

Figure 4.5.5 - VERA LA900 load adapter at pin point 12,5 - facing rearward

Moving the quick-locking pin of the VERA LA900 load adapter from 12 to 11 results in 12,5 as the new pin point.

4.6 Mounting the VERA20 loudspeaker

To set up the VERA20 loudspeaker system, proceed as follows:

WARNING

1. Please note that setting up the SFV rigging frame always requires two persons!

NOTE

2. Place the SFV20 rigging frame on the top VERA20 loudspeaker.
3. Pull back the SFV20 rigging frame until its front splay links align with the rigging tracks of the top loudspeaker.
4. Loosen the two front quick-locking pins on the SFV20 rigging frame and insert them into the holes of the top VERA20 loudspeaker.

WARNING

5. Check that all quick-locking pins are always completely inserted!

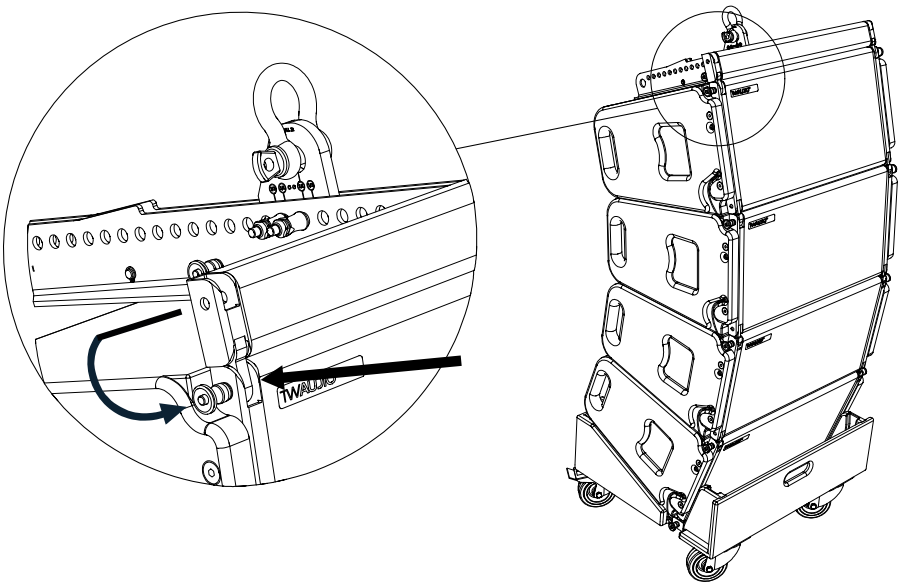

Figure 4.6.1 - SFV20 rigging frame on top VERA20 loudspeaker

NOTE

6. Bring the SFV20 rigging frame into a horizontal position.

7. Loosen the quick-locking pin for the rear hook on the SFV20 rigging frame. The hook on the SFV20 rigging frame must fold out downwards.

8. Loosen the quick-locking pin on the main carrier of the upper VERA20 loudspeaker´s rear rigging.

9. Lower the SFV20 rigging frame until the hook slides into the main carrier of the rear rigging.

WARNING

10. Insert the quick-locking pin into the main carrier of the top VERA20 loudspeaker´s rear rigging so that the rigging frame´s hook is connected to the top loudspeaker.

11. Reinsert the quick-locking pin of the hook on the SFV20 rigging frame into its position.

12. Check that all quick-locking pins are always completely inserted!

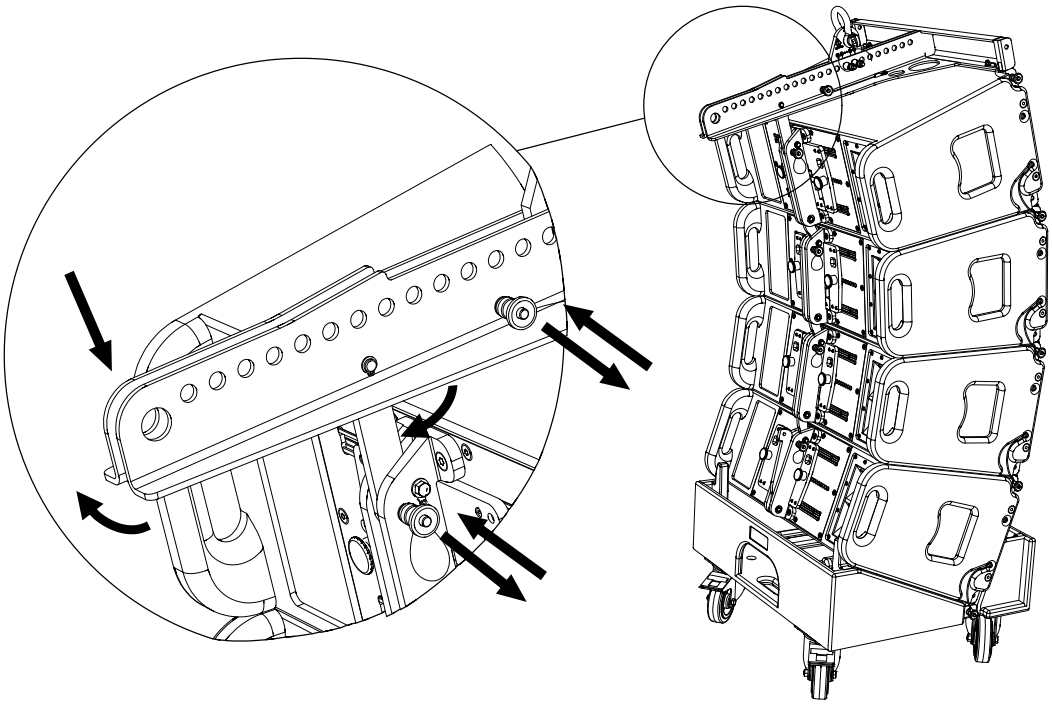

Figure 4.6.2 - Fold out the hook

WARNING

13. Insert the hook of your chain hoist into the shackle of the VERA LA900 load adapter, which is mounted on the SFV20 rigging frame. The pin points suitable for your application have been previously selected.

14. Attach another VERA LA900 load adapter to the rigging frame at point D. Mount it directly behind the first load adapter.

15. Attach these VERA LA900 load adapter using two quick-locking pins each to the SFV20 rigging frame!

16. Check that all quick-locking pins are always completely inserted!

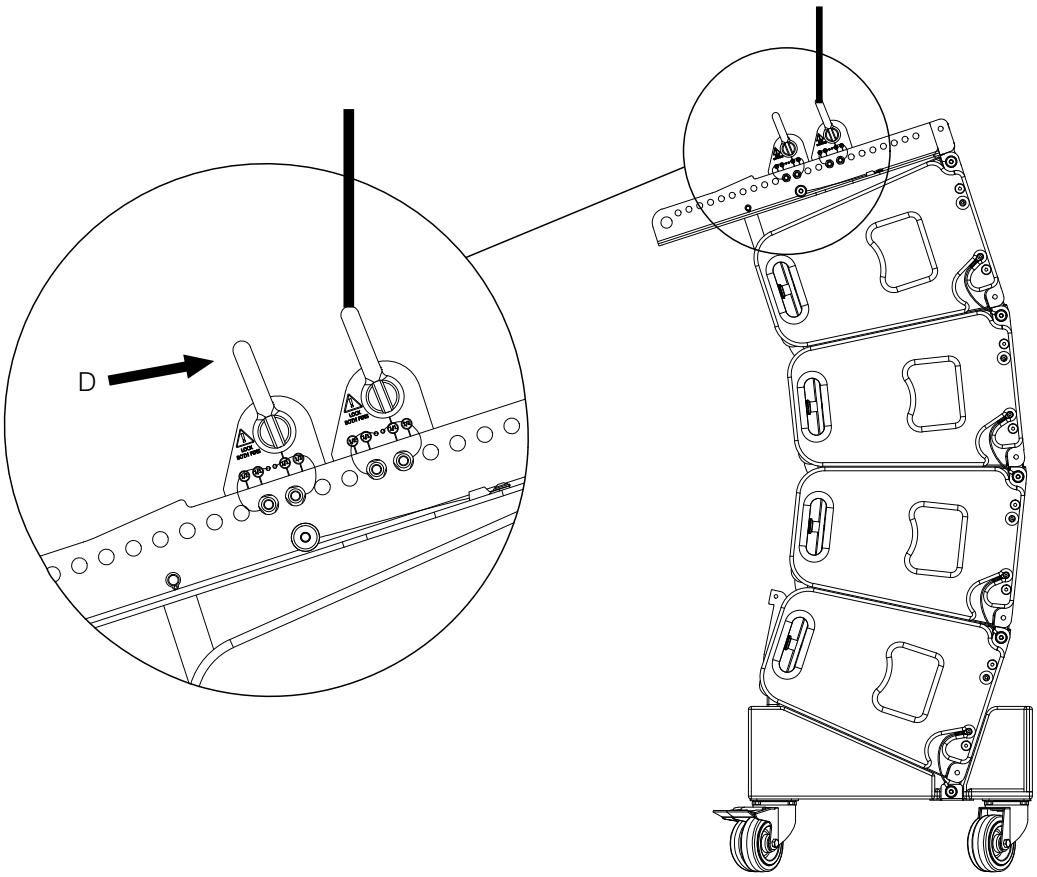

Figure 4.6.3 - Mounting second VERA LA900 load adapter

WARNING

17. Actuate the chain hoist and raise the SFV20 rigging frame with the VERA20 loudspeakers approximately one meter, moving each hook on the main carrier rear rigging to its holding position.

WARNING

18. Move all left-hand sliders on all speakers to the right until they display the same angle value as the right-hand sliders. Now all speakers are securely mounted.

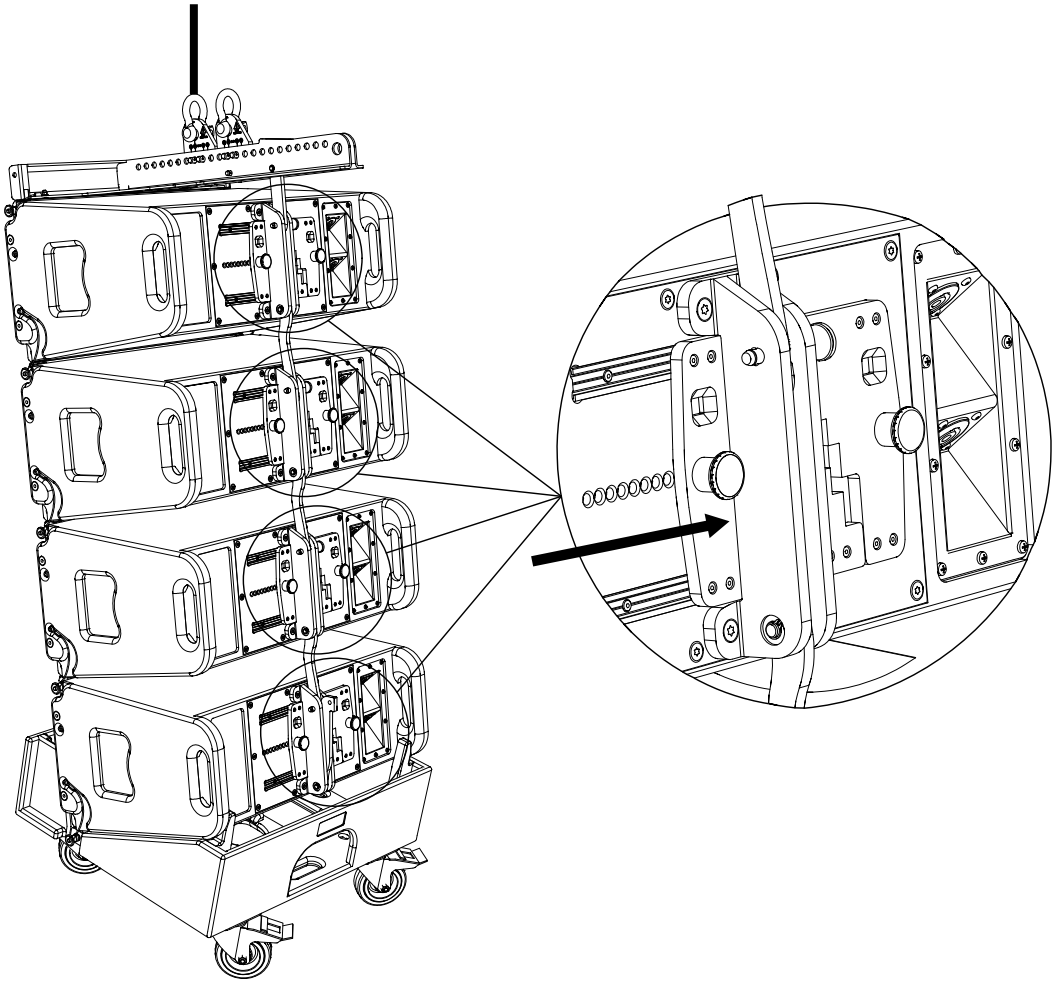

Figure 4.6.4 - Move all left sliders

NOTE

19. Actuate the chain hoist and raise the SFV20 rigging frame with the VERA20 loudspeakers once more.

20. Hold the lower part of the transport dolly with one hand.

21. Remove both quick-locking pins on the left and right side of the transport dolly and place it on the ground.

22. Store the complete transport dolly in a safe place until reused.

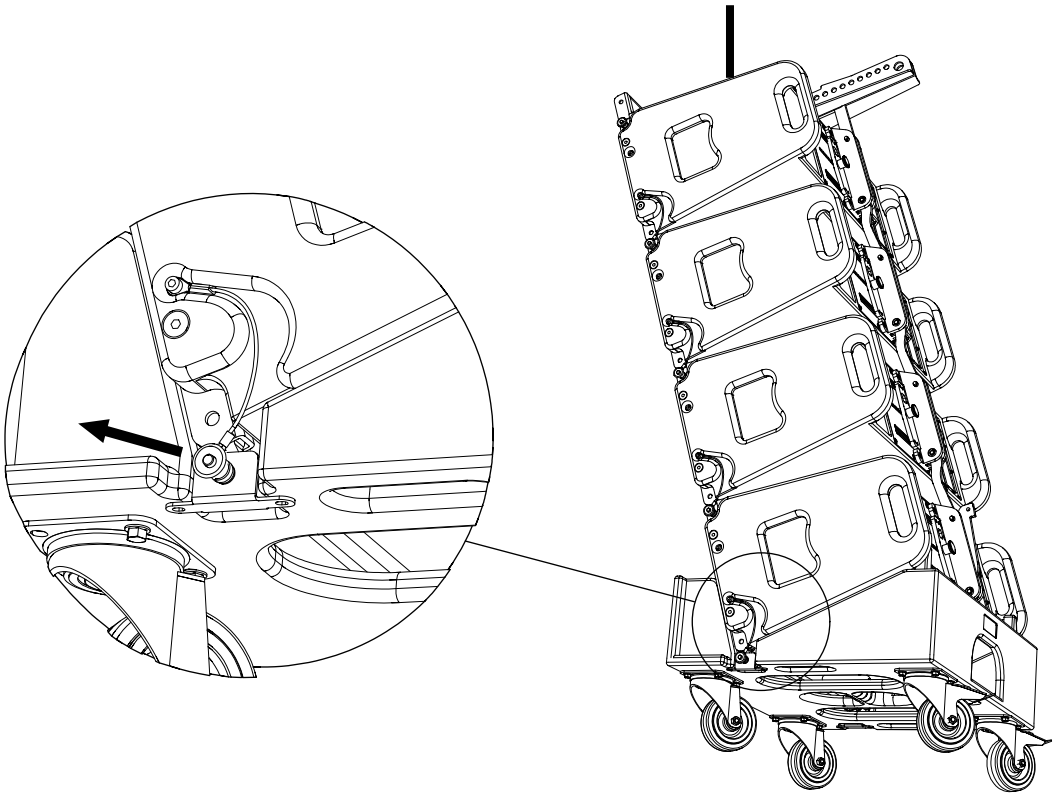

Figure 4.6.5 - Remove bottom part of the transport dolly

4.7 VERA20 setup from the second speaker set

Continue setup of the VERA20 loudspeaker system for rigging as follows:

WARNING

1. Please note that setting up the SFV20 rigging frame always requires two persons!

NOTE

2. Proceed preparation for the second loudspeaker set as described in chapter 4.4.
3. Use a chain hoist to place the already assembled loudspeakers onto the top loudspeaker of the second loudspeaker set.
4. Slide the second speaker set on the transport dolly forward until the front splay links on the bottom speaker meet the rigging tracks on the top speaker of the second speaker set.

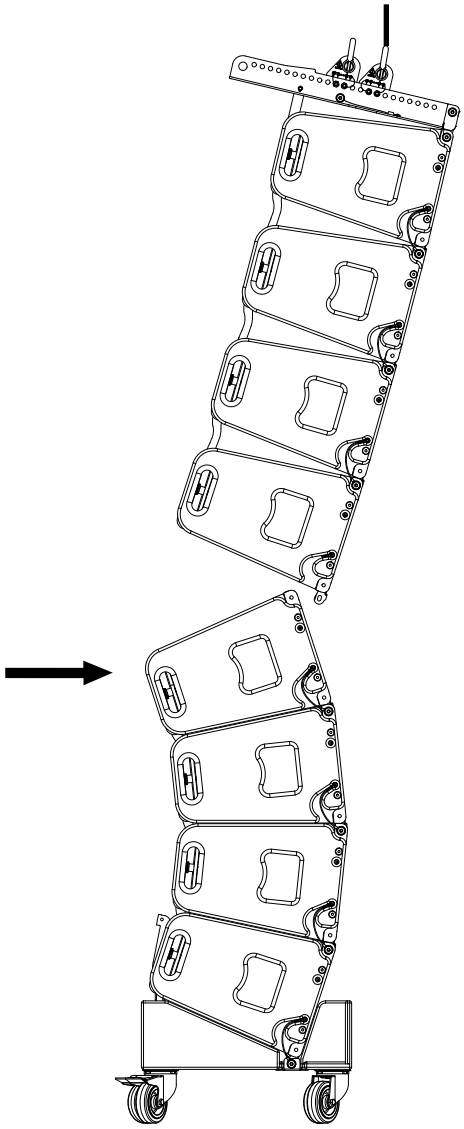

Figure 4.7.1 - Second loudspeaker set

WARNING

5. Now fasten the two front quick-locking pins of the VERA20 loudspeaker in the holes of the top loudspeaker of the second speaker set.

6. Check that all quick-locking pins are always completely inserted!

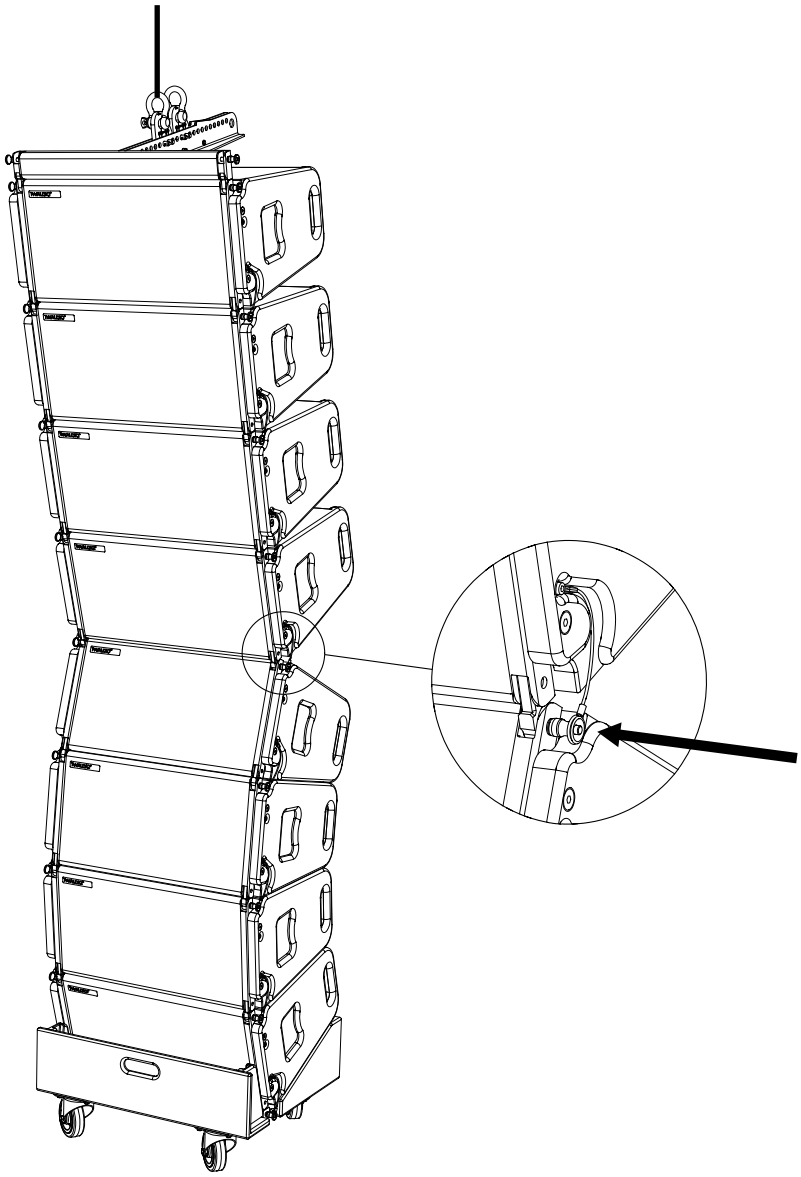

Figure 4.7.2 - Set quick-locking pins

NOTE

7. Fold the hook, on the main carrier of the rear rigging, of the lowest speaker of the first loudspeaker set, completely down.

8. Loosen the quick-locking pin on the main carrier of the rear rigging of the top loudspeaker in the second loudspeaker set.

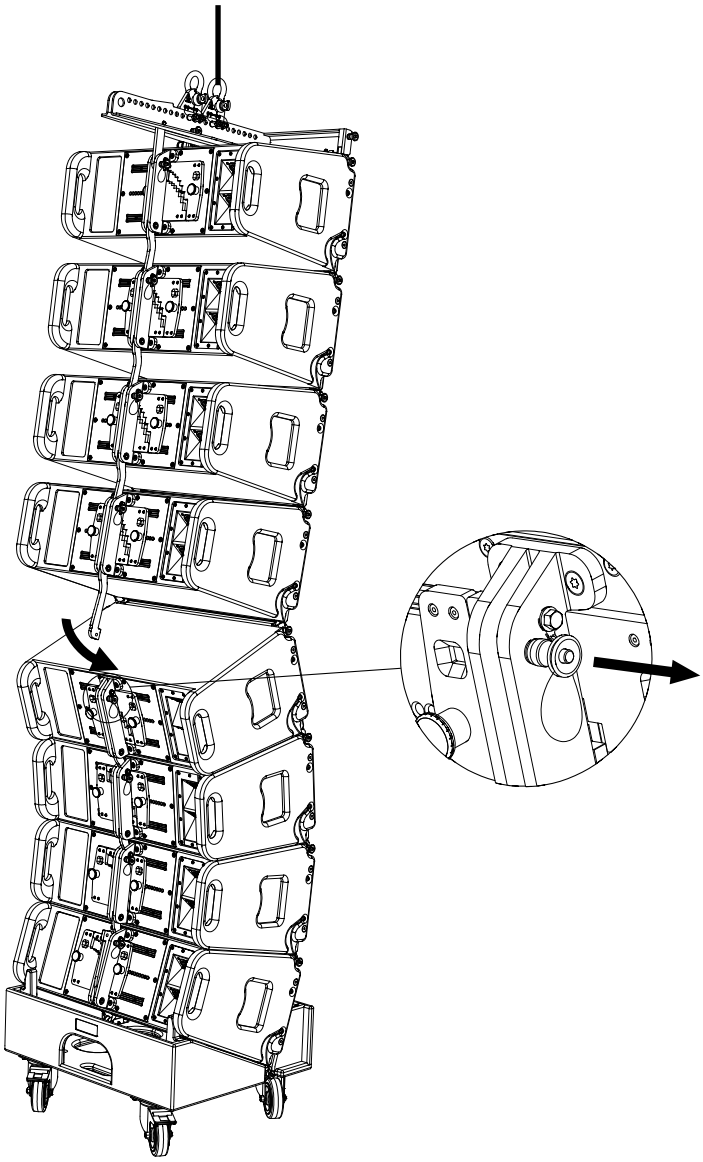

Figure 4.7.3 - Fold the hook out

WARNING

9. Actuate the chain hoist and raise the SFV20 rigging frame with the VERA20 loudspeakers so that the loudspeakers lift off the ground and hang freely.

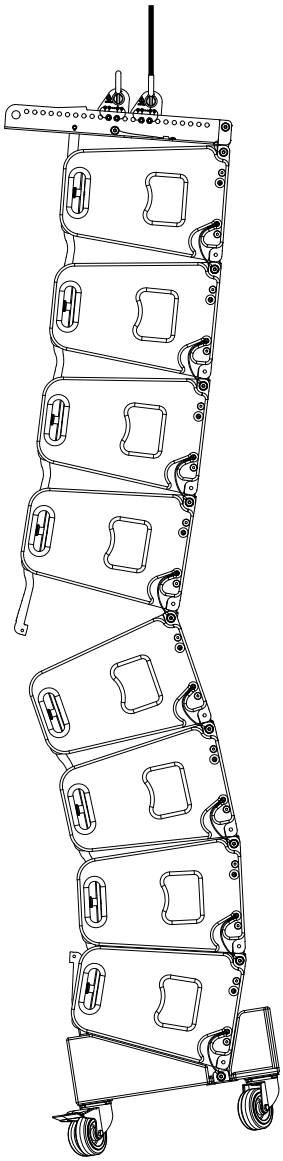

Figure 4.7.4 - Second loudspeaker set

WARNING

10. Move all left-hand sliders on all loudspeakers to the right until they display the same angle value as the right-hand sliders. Only the top speaker in the second speaker set is exempt from this step. Now all speakers in the lower set are securely mounted.

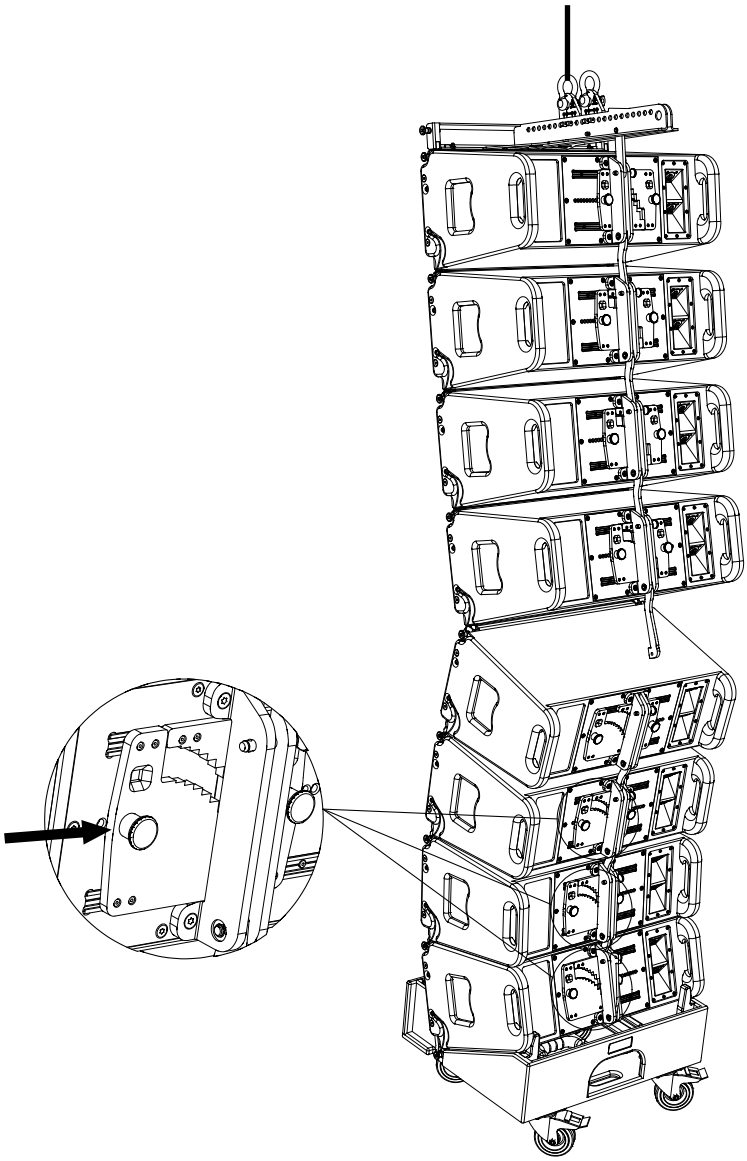

Figure 4.7.5 - Move left sliders

WARNING

11. Have two persons lift the second loudspeaker set until the hook of the bottom speaker of the first loudspeaker set meets the rear rigging of the top speaker of the second loudspeaker set.

12. Insert the quick-locking pin on the main carrier of the rear rigging of the top loudspeaker in the second VERA20 loudspeaker set so that the hook is fixed.

13. Check that all quick-locking pins are always completely inserted!

14. Move the left-hand slider on the top speakers of the second loudspeaker set to the right until it displays the same angle value as the right-hand slider. Now all speakers are securely mounted.

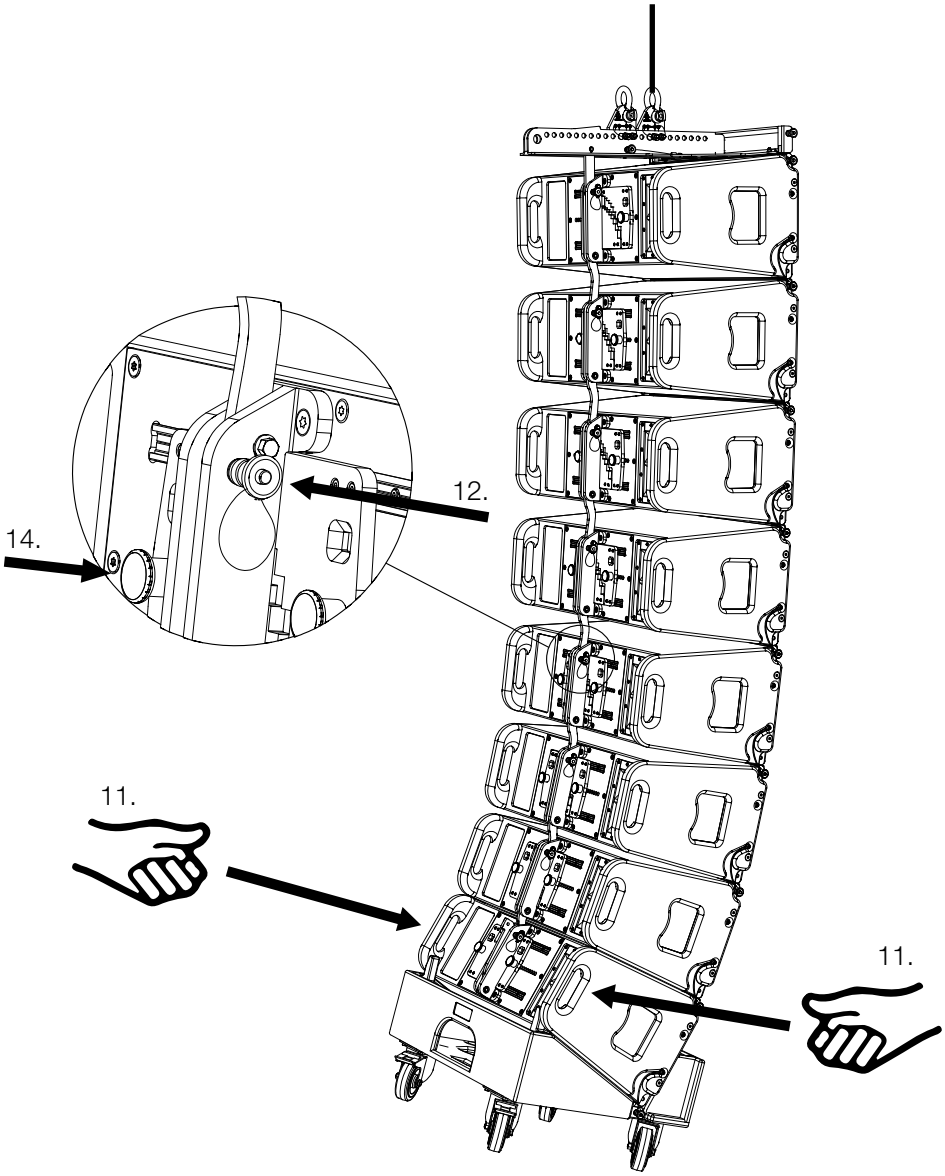

Figure 4.7.6 - Lift second louspeaker set

NOTE

15. Actuate the chain hoist and raise the SFV20 rigging frame with the VERA20 loudspeakers once more.

16. Hold the lower part of the transport dolly with one hand.

17. Remove both quick-locking pins on the left and right side of the transport dolly and place it on the ground.

18. Store the complete transport dolly in a safe place until reused.

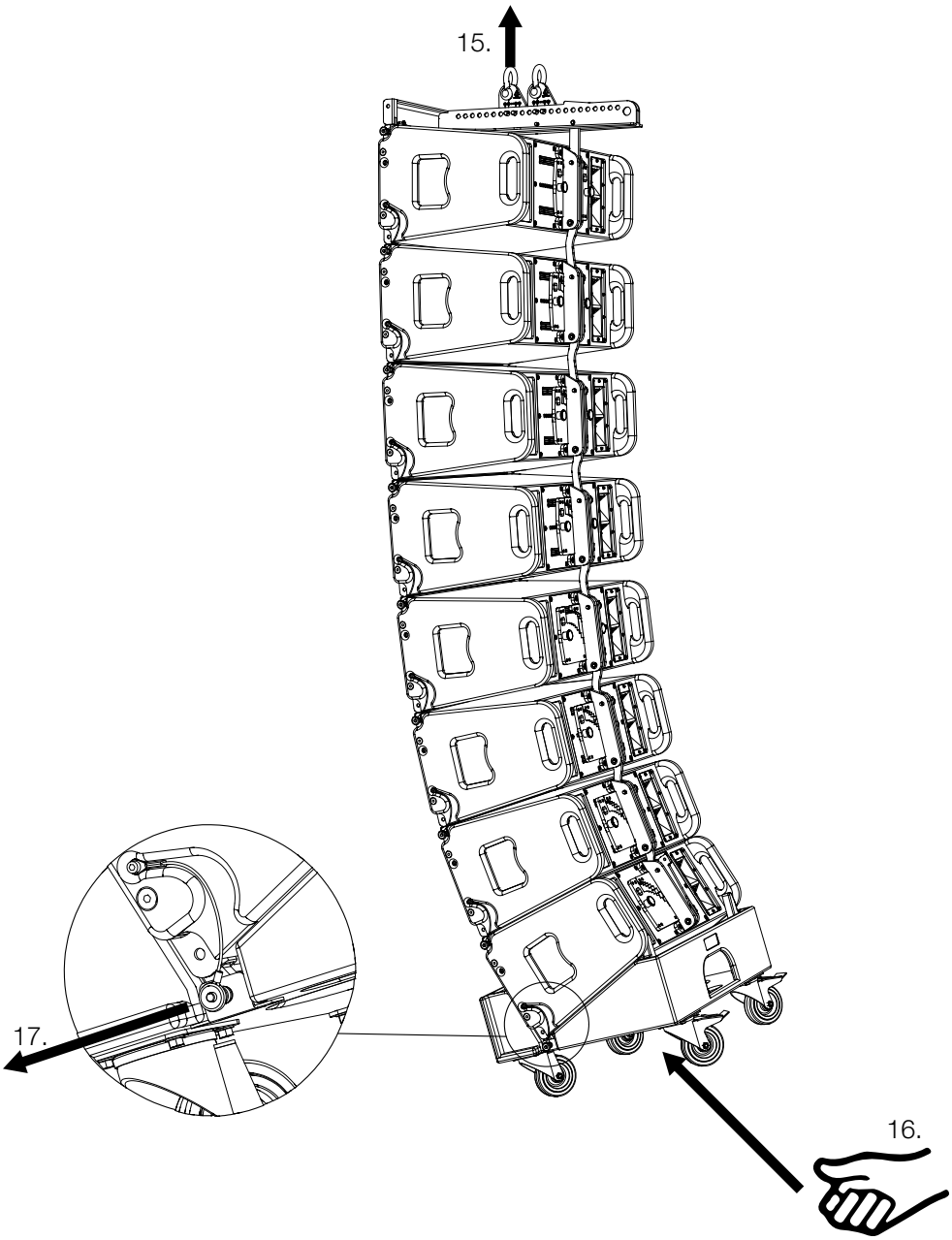

Figure 4.7.7 - Remove transport dolly

NOTE

19. Push the splay links on both sides back into the flying tracks and secure them using the quick-locking pins.

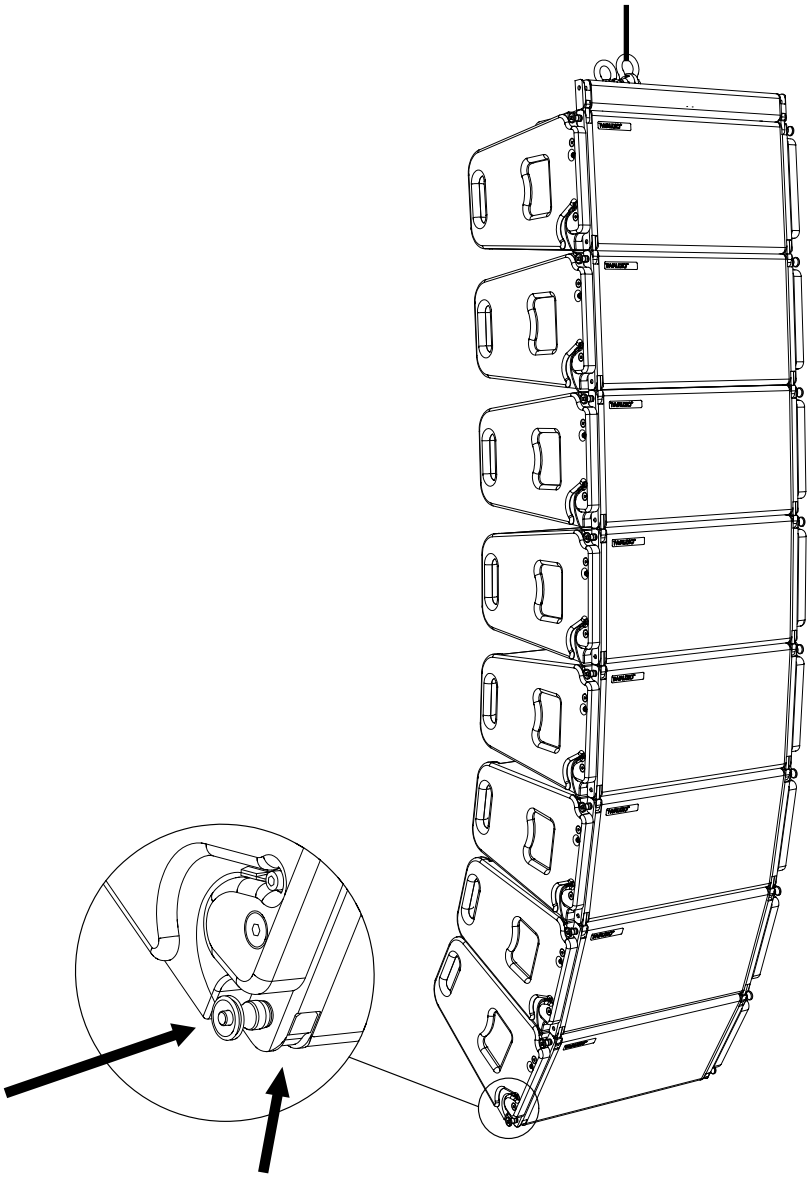

Figure 4.7.8 - Set quick-locking pins

4.8 Compression mode

NOTE

The SFV20 rigging frame can be used for Compression mode.

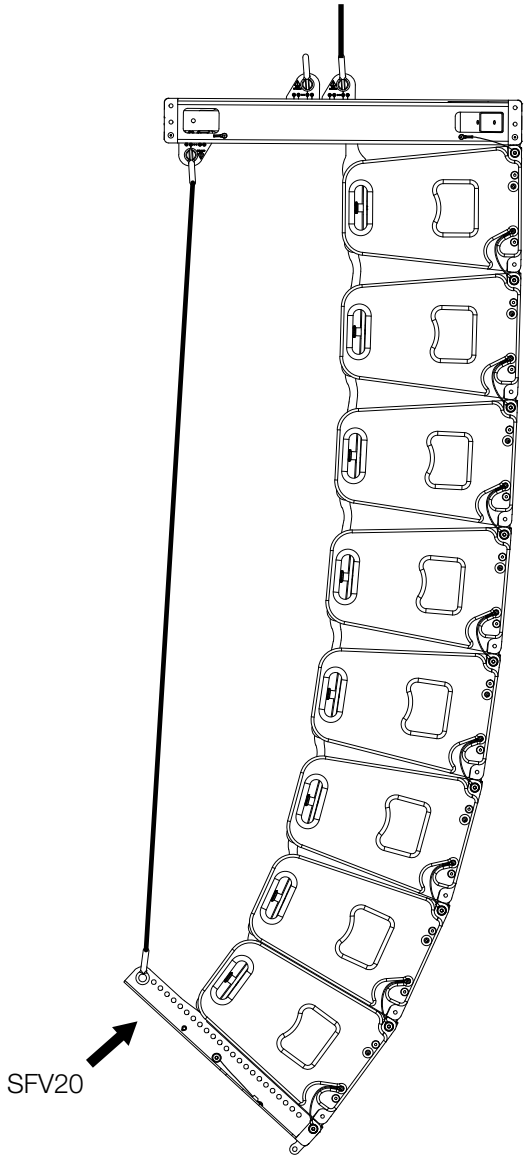

Figure 4.8 - Compression mode

5. Transport and Storage

NOTE

Ensure that the surface of the rigging frame is not damaged during transport and storage. Moisture may penetrate where steel surfaces are exposed by scratches and result in corrosion.

This is why the product should be transported and stored in a safe, careful, dry and largely dust-free manner.

The following accessories are available from TWAUDiO for the SFV20 rigging frame:

- VERA LA900 (Load adapter incl. shackle)

The original packaging is unsuitable as permanent storage and transport packaging.

6. CE Declaration of Conformity

Copy and translation of the original CE Conformity Declaration:

We hereby declare that the below-referenced components by virtue of their design and construction, and in the configuration placed on the market by us, satisfy the safety and health requirements of the applicable EC directives. This declaration becomes invalid in case of modifications that have not been approved by us.

This declaration applies to the following components

• SFV20

as well as all model variants based on these, provided that they correspond to the original factory models and have not been technically modified in any way.

Applicable directives:

• 2001/95/EG

Applicable national standards and technical specifications:

• DIN EN 18800
• DIN EN ISO 12100
• DGUV Vorschrift 17 und 18

Berlin, Germany, January 1st, 2021

Bernhard Wüstner

7. Disposal

If you have any question regarding the disposal of used devices, please contact us under the following telephone number:

+49 (0) 71 41 - 48 89 89 0

In countries outside of the European Union, comply with local regulations.

TW AUDiO INTERNATIONAL GmbH
Osterholzallee 140-2
71636 Ludwigsburg (Germany)

Phone: + 49 (0) 71 41-48 89 89 0
Fax: + 49 (0) 71 41-48 89 89 99
E-Mail: info@twaudio.de
WWW: www.twaudio.de