For low end, the VERA20 is accompanied by the VERA S32, a compact flyable subwoofer with the same 60 cm (23.6 ") width as the VERA20, and equipped with an 18" driver in the front and a 14" driver to the rear.

Perfectly matched with VERA20 as its full range partner in terms of power and throw, the S32 offers a number of dispersion options to suit every situation including cardioid and endfire modes.
Cardioid mode is optimised for maximum attenuation of rearward sound dispersion and is capable of achieving attenuation higher than 15 dB over the entire LF spectrum.
Endfire mode is optimised for maximum sound pressure at the front with simultaneous partial reduction at the rear.

Indeed, the directionality of the VERA S32 delivers a distinctively solid and pleasingly musical low frequency performance, particularly in venues that are reverb heavy, without causing undue rearward and sideways spillage.

Integration into a VERA20 array is also simple thanks to the complementary, fully integrated rigging hardware. In fact, with its coherent phase response, the S32 is a plug'n'play option that will match a great many TW AUDiO tops and subs, adding to its ROI and subhire value.

Key Features

- Two aligned chassis, (18" front / 14" rear) for cardioid and endfire mode from one enclosure
- Cardioid, Hypercardioid, Endfire and Omni modes (preset dependent)
- Pole mount flange for operation with top on a distance rod
- Integrated rigging system for VERA20 arrays
- >15 dB attenuation of the entire transmission range at the rear of the subwoofer in cardioid mode
- 134 dB SPLmax (endfire mode), 2400 W (front) / 1400 W (rear) program power capacity
- Coherent phase response with all TW AUDiO loudspeakers
- Operation with dedicated TW AUDiO presets on Lab.gruppen, Powersoft or Dynacord TGX and IPX amplifiers

Applications

- Galas, events and shows
- Churches, houses of worship, religious places
- Theatres and cultural places
- Bars and restaurants
- Arenas and sports venues
- Concerts and touring

Technical Data

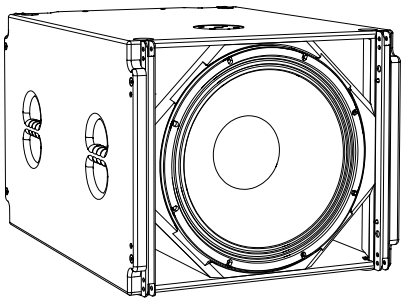

Drivers	1× 18“ LF front | 1× 14“ LF rear
Frequency range	38 - 120 Hz
Power capacity program / peak	2400 / 4800 W 18“ | 1400 / 2800 W 14“
Impedance	8 Ω 18“ / 8 Ω 14“
Coverage (h × v)	cardioid / hypercardioid
Sensitivity 1 W / 1 m	99 dB
SPL max / 1 m	134 dB
Connection	speakON® NL4 2± 18“ | NL4 1± 14“
Dimensions (H × W × D)	506 × 600 × 800 mm | 19.92 × 23.62 × 31.50 in
Weight	54,2 kg | 122.6 lbs
Finish	Polyurea-coated | (RAL colors optional: Warnex textured paint)
Accessories	see twaudio.com

Technical Drawing

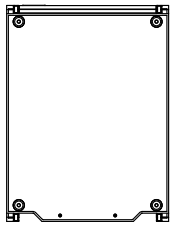

bottom view

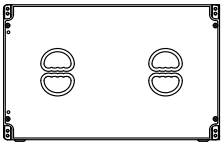

left view

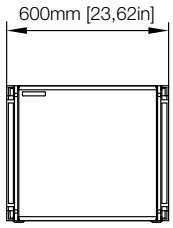

front view

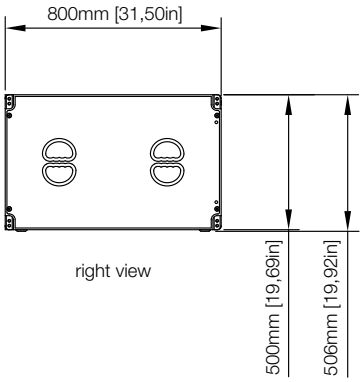

right view

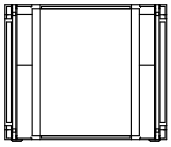

rear view

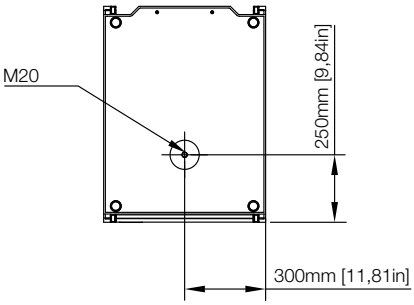

top view

Frequency Response

FULL mode endfire / **cardioid** | IMPEDANZ front / **rear**

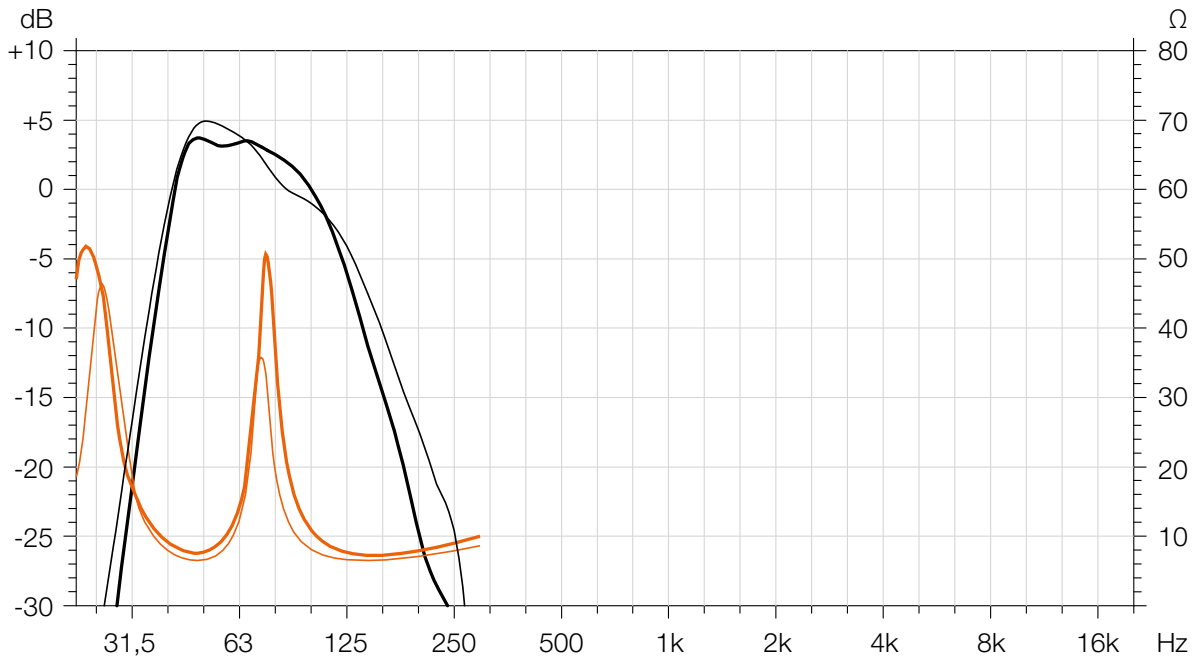

Polar Pattern

40 Hz | **63 Hz** | 100 Hz

Endfire

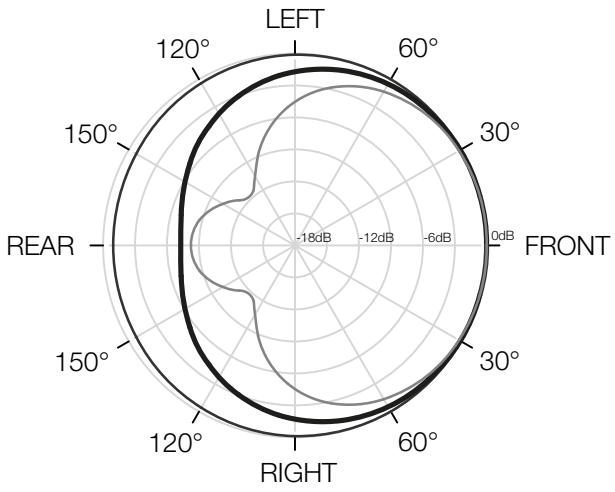

Cardioid

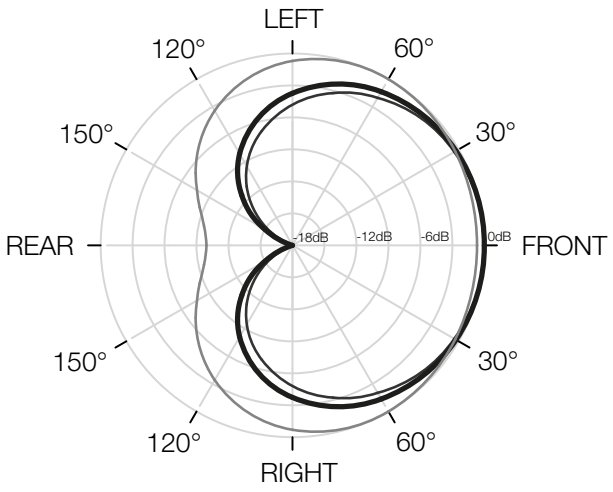

Architect Specifications

The loudspeaker shall consist of a two seperated bass-reflex chamber enclosure driven and protected by a dedicated powered amplified controller. The loudspeaker shall be a biamped dual-channel subwoofer with directional radiation patterns depending on preset used. The loudspeaker shall have a higher than 15 dB attenation of the rearward sound dispusion.

The enclosure shall feature one 18“ long excursion neodymium LF transducer at the front and one 14“ long excursion neodymium LF transducer at the rear for cardioid and endfire mode from one enclosure.

The usable system bandwidth shall be 38 Hz to 120 Hz.

Maximum peak SPL shall be 134 dB. The long-term handling capacity shall be 2400 W program and 4800 W peak at the front and 1400 W program and 2800 W peak at the rear. The nominal impedance of the loudspeaker shall be 8 Ω at the front and

The enclosure cabinet construction shall cons grade birch plywood. The front and the rear of the enclosure shall be protected by a perforated, powder-coated steel with flame retardant, hydrophobic and acoustically transparent black 3D mesh fabric. The dimensions shall be 506 mm (19.92 in) in width, 600 mm (23.62 in) in height and 800 mm (31.50 in) in depth and the enclosure weight shall be 54.2 kg (119.5 lbs).

The enclosure shall feature four integrated ergonomic handles, four stacking rubber feet and a M20 pole mount flange to adopt a distance rod when used with a top loudspeaker. The enclosure shall be connected via two parallel 4-pole speakON® sockets.

The loudspeaker shall be the TW AUDiO VERA S32.

References
The response curves of the system are available upon request – support@twaudio.com

Manufacturer:
TW AUDiO INTERNATIONAL GmbH
Osterholzallee 140-2
71636 Ludwigsburg (Germany)

TW AUDiO INTERNATIONAL GmbH
Osterholzallee 140-2
71636 Ludwigsburg (Germany)

Phone: +49 7141 488989-0
Fax: +49 7141 488989-99
Mail: info@twaudio.com

MADE
IN
GERMANY

v.2023.07.14.2.0 © TW AUDiO INTERNATIONAL GmbH | Design and specifications are subject to change without notice.