TWAUDIO®

VERA S32

Operation manual

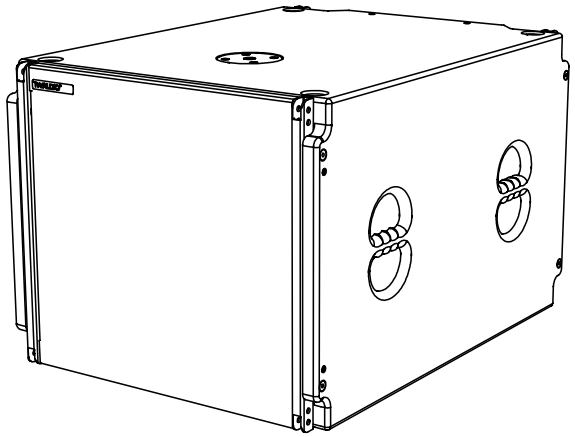

Introduction

Thank you for choosing a high-quality product “MADE IN GERMANY” from the brand TW AUDiO.

The VERA S32 is a compact, flyable subwoofer belonging to the VERA20 series. It is equipped with an 18” driver in the front and a 14” driver rearwards. Both long throw high-performance drivers are optimally aligned. Various operating modes and the resulting coverage variations allow for extremely flexible solutions. Depending on the selected preset, it can be used in Cardioid, Endfire or Omni mode.

Cardioid mode is optimized for maximum attenuation of the rearward sound dispersion, achieving attenuation greater than 15 dB over the entire frequency range. The end-fire mode is optimized for maximum sound pressure at the front while also providing partial rearward sound dispersion.

The advantages are obvious: Thanks to directivity control, subwoofer performance is more solid and musical, especially in environments with significant natural reverb. Performers on stage and those behind the stage are spared from excessive bass levels.

With its 60 cm system width, VERSA S32 is the perfect low-frequency addition to the TW AUDiO family.

If you lend your product to another party, inform that party of the safety-related operating procedures and hand over this assembly guide. If you require additional copies of this manual, you can obtain them free of charge from TW AUDiO or download them from www.twaudio.de

Instructions in this user manual

Strictly adhere to the instructions contained in this operating manual that are marked as follows:

This symbol in combination with the signal word “Warning” identifies a potentially hazardous situation. Failure to comply with this safety instruction can lead to serious injury or even death.

This symbol in combination with the signal word “Warning” identifies a potentially hazardous situation for persons with a pacemaker. Failure to comply with this safety instruction can lead to serious injury or even death.

This symbol in combination with the signal word “Caution” identifies a potentially hazardous situation. Failure to comply with this safety instruction can lead to light or moderate injury.

NOTE

This symbol in combination with the signal word “Note” identifies a potentially hazardous situation. Failure to comply with this safety instruction can lead to product damage.

TIP

This symbol in combination with the signal word “Tip” identifies additional information or notes that will simplify working with TW AUDiO products on the basis of practical experience.

Notes on the products

Read manual before use!

Before using the device, carefully read the operating manual and keep it with the VERA S32 loudspeaker.

General information

Operation manual: OM-VERA S32
Version 3.0 en, 02/2026
© by TW AUDiO INTERNATIONAL GmbH 2026; all rights reserved.

All information contained in this operating manual was correct to the best of our knowledge at the time of printing.

Quality warranties or assurance of suitability for a certain type of use based on the technical specifications, dimensions and weights are not granted by TW AUDiO.

TW AUDiO also shall not assume liability for any secondary damage (property damage and/or personal injury) nor for the failure to comply with this operating manual!

TW AUDiO reserves the right to update this document based on recent developments.

TW AUDiO INTERNATIONAL GmbH
Osterholzallee 140-2
71636 Ludwigsburg
Germany

Phone : + 49 (0) 71 41-48 89 89 0
Fax: + 49 (0) 71 41-48 89 89 99
E-Mail: info@twaudio.de
WWW: www.twaudio.de

Content

1. Safety | Intended use 5
2. Overview 7
2.1 Components 7
2.2 Operation modes 8
2.2.1 Cardiod 8
2.2.2 Endfire 8
3. Technical specifications 9
3.1 Data sheet 9
3.2 Connection diagram 9
4. Commissioning 10
4.1 Setup 10
4.2 M20 pole mount flange 10
4.3 Rigging tracks 13
4.4 Operation 15
4.5 Connecting the cable 16
5. Transport and Storage 17
6. CE Conformity Declaration 18
7. Disposal 19

1. Safety | Intended use

Please adhere to the following safety instructions to avoid risks when operating loudspeakers.

The VERA S32 loudspeaker was developed for use in professional sound systems. The loudspeaker may only be used by trained and qualified personnel.

Note the operating modes described in this operating manual. Other uses are not permissible.

Damage caused by improper use is not covered by TW AUDiO.

WARNING

Loudspeakers generate an electromagnetic field. Persons with pacemakers are not permitted to remain in the immediate vicinity of loudspeakers as the electromagnetic fields can cause pacemakers to malfunction.

WARNING

When working with heavy loads exceeding 20 kg (44 lbs.), use suitable aids (dollies, hoisting slings, etc.). Multiple persons may be required depending on the situation.

Ensure that the units are in a stable position and are firmly attached. A falling loudspeaker can result in serious personal injury and property damage.

When using and assembling TW AUDiO loudspeakers, only use materials specified by TW AUDiO. These tasks must be performed by qualified personnel. Adhere to the applicable safety regulations.

NOTE

When setting up loudspeakers, ensure that they are not exposed to the following ambient conditions:

- Direct sunlight
- Humidity
- Jolting
- Dust

WARNING

Keep away from the immediate vicinity of loudspeakers that are operated at high sound pressure levels. These loudspeaker systems are capable of endangering your health. Sound levels beginning as low as approximately 90 dB SPL can lead to long-term hearing impairment.

NOTE

Avoid:

- Feedback
- Distorted signals (clipping) and
- Peaks resulting from switching on devices, plugging in devices or unplugging devices during operation.

Such signals can lead to loudspeaker overload and ultimately to loudspeaker failure.

WARNING

Ensure that the loudspeaker is not exposed to permanent thermal overloads. Thermal overloads may cause a fire and result in serious personal injury and property damage.

Note that TW AUDiO does not provide a warranty for damage that can be attributed to this type of overload and therefore cannot be held liable for any secondary damage.

NOTE

A permanent magnetic field is present in the immediate vicinity of loudspeakers. Ensure that objects which react sensitively to magnetic fields are not located in the immediate vicinity of the loudspeaker. In particular, this applies to magnetic storage media, magnetic stripe cards such as debit cards and CRT displays. A distance of approximately one meter is sufficient to avoid damage.

NOTE

Check loudspeakers and accessory parts regularly for visible wear. This is essential to ensure continuing fault-free operation. Worn parts should be replaced immediately. Spare parts are available from TW AUDiO.

2. Overview

2.1 Components

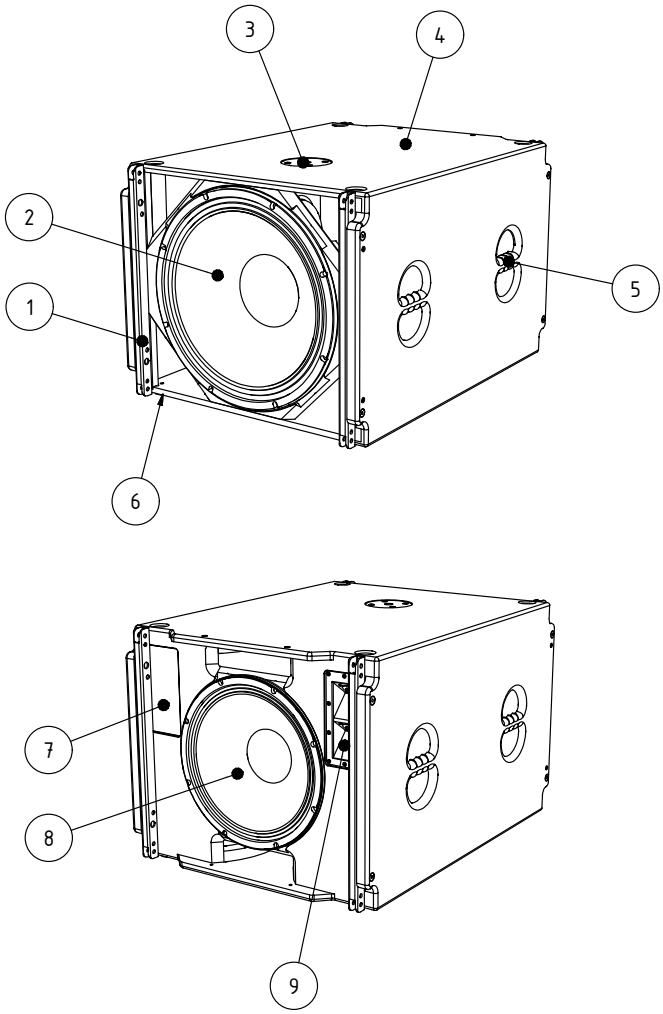

Figure 2.1 - Overview

1. Rigging tracks (4 pieces)
2. 18“ cone driver (front)
3. M20 pole mount flange for attaching a distance rod
4. 15 mm Multiplex enclosure – polyurea surface finish
5. Ergonomic carrying handles (two each, left and right)
6. Rubber feet (4 pieces)
7. Type label
8. 14“ cone driver (rear)
9. Terminal plate

2.2 Operation modes

The VERA S32 can be operated in one of two modes. The operating mode is selected by choosing the preset in the system amplifier.

2.2.1 Cardiod

In Cardioid mode, the focus is on maximum sound pressure reduction behind the loudspeaker setup, with partial forward-facing level addition.

The rear speaker produces an inverted signal to cancel out sound components on the back. Depending on the distance between the loudspeakers and their transit time difference, there will be a frequency-dependent sound pressure level addition in front of the loudspeaker arrangement. By adjusting the transit time difference between the two individual drivers, a different dispersion pattern can be achieved.

2.2.2 Endfire

In Endfire mode, the focus is on maximum forward-facing sound pressure level addition, with partial reduction to the rear.

To achieve this, the front loudspeaker's signal is delayed so that its signal is in phase with the rear loudspeaker in the direction of sound. This results in a sound pressure level addition over a wide frequency range. Depending on the speaker distance, there is a frequency-dependent sound pressure level reduction on the rear side. The strongest cancellation is to be expected at the frequency whose wavelength corresponds to four times the driver spacing.

NOTE

Never change the preset during active operation. Operating with an incorrect preset can damage parts of the loudspeaker.

3. Technical specifications

3.1 Data sheet

Drivers	1x 18“ LF front / 1x 14“ LF rear
Frequency response	38 - 120 Hz
Power handling (program/Peak)	2400 / 4800 W 18“ 1400 / 2800 W 14“
Impedance	8 Ω 18“ / 8 Ω 14“
Max. SPL / 1 m	134 dB
Dimensions (w x h x d)	600 × 506 × 800 mm [23.62 x 19.92 x 31.5 in]
Weight	57 kg [125.66 lbs]
Surface	Polyurea-coated

3.2 Connection diagram

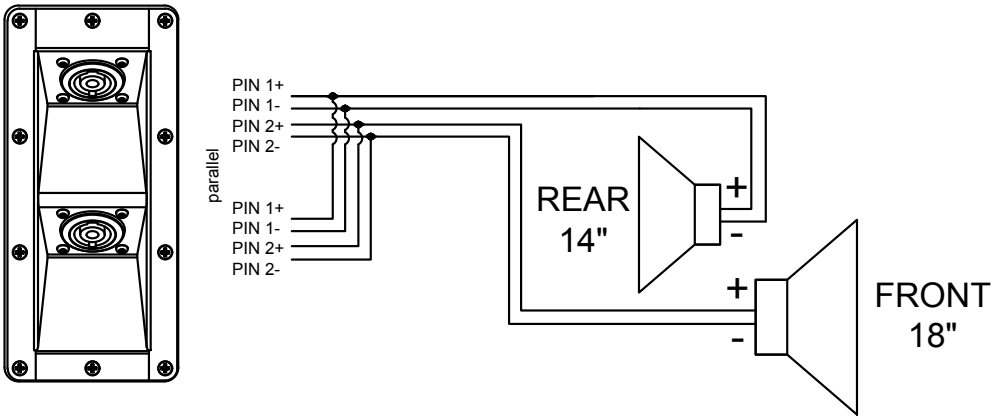

Figure 3.2 - Connection diagram

4. Commissioning

4.1 Setup

The VERA S32 loudspeaker is designed to be used as a single loudspeaker as well as for array operation.

WARNING

Make sure that all system structures are located on a firm, level surface and that the surface can bear the total weight!

WARNING

Make sure the speakers are securely fastened to prevent personal injury and property damage. Secure stacked loudspeakers properly so that they can be tipped by 10° in any direction without toppling.

NOTE

TW AUDiO recommends using only the accessories specified by TW AUDiO for securing and mounting loudspeakers.

4.2 M20 pole mount flange

For all system components mounted on top of the M20 pole mount flange, observe the respective operating instructions!

Also be sure to observe all of the following warnings:

WARNING

Make sure that the maximum load of 50 kg / 110 lbs for the M20 pole mount flange is not exceeded! Figure 2.1 – Item 2.

WARNING

Make sure that no unauthorized persons can access the system structures!

Cordon off the area professionally!

WARNING

The M20 pole mount flange (figure 2.1- item 2) is not designed for side forces once mounted – do not apply any pressure from the sides.

Make sure that no external forces are applied to the system structures. No objects or persons should lean against the structures, no objects should be thrown against them. If pressure is applied on the flange the loudspeaker may be damaged or falling over.

WARNING

Before setting up the system outdoors, consider unexpected wind conditions at the operation site!

Disassemble your system immediately when wind speeds exceed 8 bft (34 to 40 kn / 62 to 74 kph / 38.5 to 46 mph) and secure the system components!

Make sure that there are no persons in the immediate vicinity of the system structure!

WARNING

Make sure that the system structures are not operated over the audience at wind speeds in excess of 6 bft (22 to 27 kn / 39 to 49 kph / 24.2 to 30.45 mph) and that there are no persons in the immediate vicinity of the system structure!

WARNING

Please note that only centered loads are allowed to be placed on the M20 pole mount flange – Figure 2.1 – Item 2.

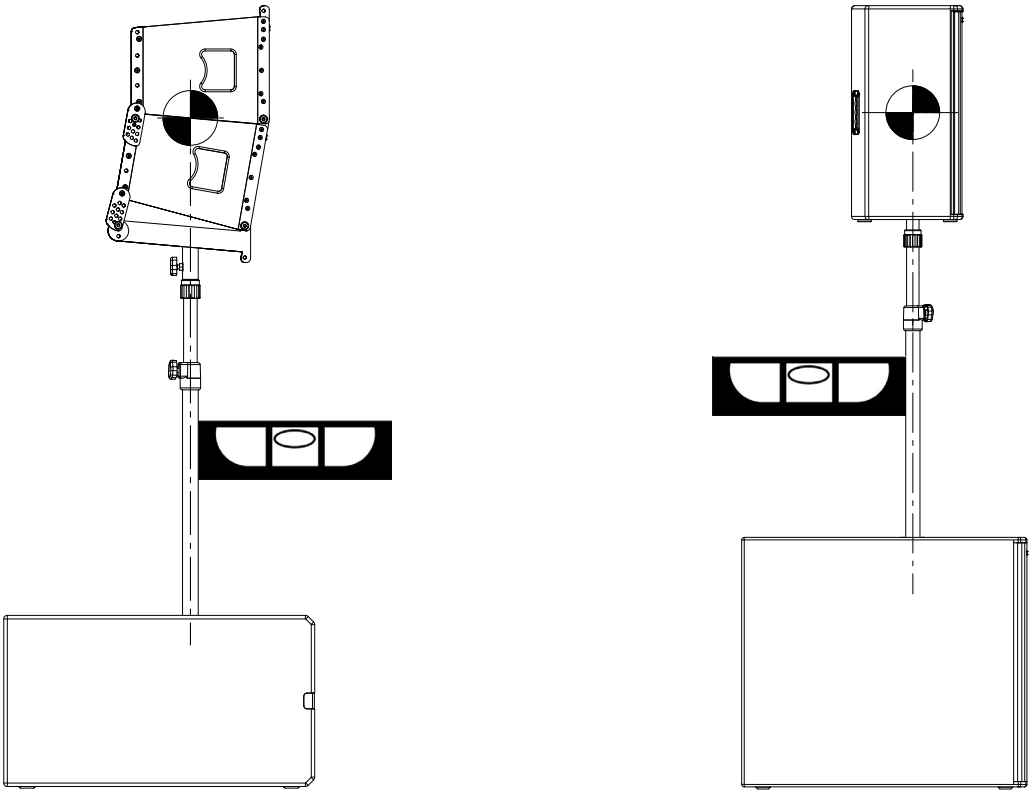

Figure 4.2.1 - system setup VERA S32

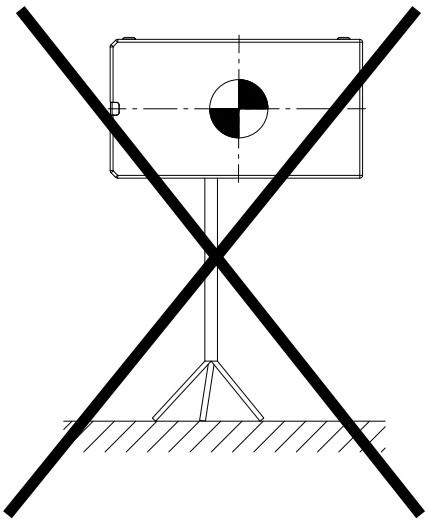

Figure 4.2.2 - VERA S32 – improper installation

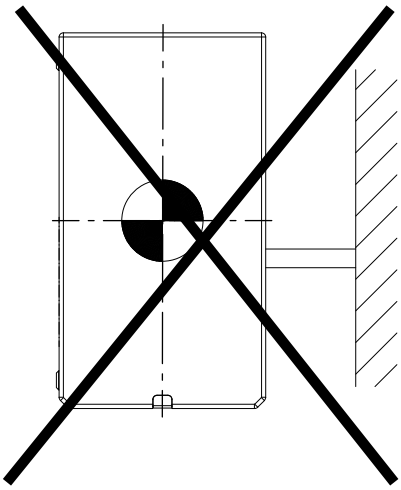

Figure 4.2.3 - VERA S32 – improper wall mounting

4.3 Rigging tracks

WARNING

Please note that several VERA S32 loudspeakers should be only flown vertically in relation to each other!

WARNING

Please note that the VERA S32 loudspeakers must be mechanically correctly connected with each other. This may only be done via the front and rear rigging tracks (see figure 2.1 - pos.1) and additional box link set BLS!

NOTE

The further functionality as well as all possible setup variants of the rigging can be found in the manuals: VERA RF600.

TIP

With our simulation software EASE Focus you can plan line arrays of the series VERA20. EASE Focus is available as a free download from the TW AUDiO website at www.twaudio.com.

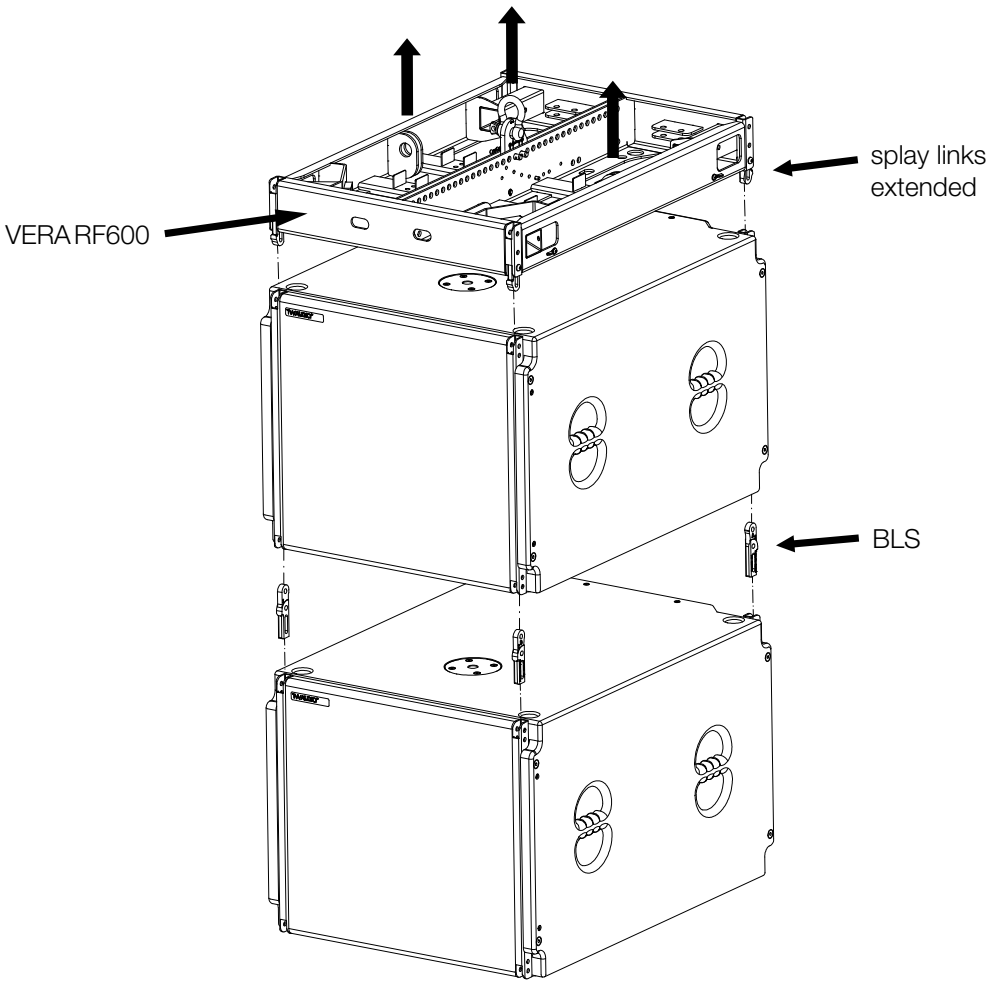

Figure 4.3.1 - VERA S32 vertical

WARNING

Make sure that no multiple VERA S32 loudspeakers are flown horizontally!

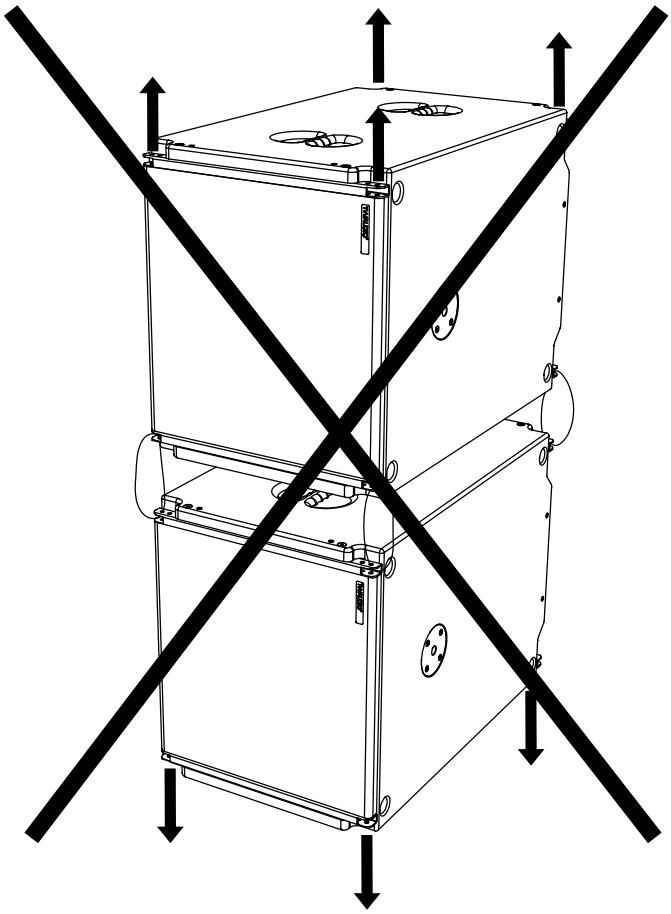

Figure 4.3.2 - improper use VERA S32 horizontal

4.4 Operation

Operation of the VERA S32 speaker requires a DSP-Controller. For this purpose, only presets developed by TW AUDiO are recommended. The TW AUDiO system racks are ideally suited for this purpose.

NOTE

Before connecting the loudspeaker to the amplifier, ensure that the right preset has been loaded.

Using a wrong, out dated or a preset not provided by TW AUDiO can lead to destruction of the speaker.

NOTE

Make sure that the amplifier's specifications meet the requirements. Using an amplifier that doesn't meet the specifications can destroy the loudspeaker.

Please note the technical data in section 3.1 on page 9.

4.5 Connecting the cable

To create a cable connection with an amplifier rack from TW AUDiO, proceed as follows.

NOTE

Ensure that the cable cross sectional area is sufficient (at least 1.5 mm²) to avoid power losses. TW AUDiO recommends using the loudspeaker cables available from TW AUDiO.

When connecting the cables to the loudspeaker, ensure that polarity (+/-) and pin assignment (1/2) are correct. Incorrect connection can lead to a significant change in the loudspeaker's sound characteristics and may damage the driver.

The pin connections of the VERA S32 loudspeaker can be found in section 3.2 ("Connection diagram") on page 9.

The internal wiring of the VERA S32 loudspeaker allows for parallel connection of multiple loudspeaker units.

Please note that parallel connections will decrease the total impedance of your loudspeaker configuration.

The total impedance and the resulting power of the speaker configuration must match the output power of the amplifier.

5. Transport and Storage

Due to the VERA S32 loudspeaker weighing over 40 kg [88 lbs.], three persons are required to handle and transport the unit.

NOTE

To allow a single person to transport up to two VERA S32 loudspeakers, TW AUDiO recommends using the QDB30 quad dolly.

When transporting and storing the unit, it is important to ensure that the surface and front grill of the loudspeaker are not damaged. Moisture can penetrate through exposed wood surfaces and cause the wood to swell. A bent or broken front grill will no longer adequately protect the sensitive speaker membranes.

In addition, appreciable dust deposits may considerably impair the functionality of a loudspeaker membrane. For this reason, the loudspeakers should be transported and stored in a safe, careful, dry and largely dust-free manner.

The following accessory parts for transport and storage are available from TW AUDiO:

- QDB18 (quad dolly)
- Cover2S32 (protective cover)

The original packaging is unsuitable as permanent storage and transport packaging.

6. CE Conformity Declaration

Copy and translation of the original CE Conformity Declaration:

We hereby declare that the below-referenced components by virtue of their design and construction, and in the configuration placed on the market by us, satisfy the safety and health requirements of the applicable EC directives. This declaration becomes invalid in case of modifications that have not been approved by us.

This declaration applies to the following components

- VERA S32

as well as all model variants based on these, provided that they correspond to the original factory models and have not been technically modified in any way.

Applicable directives:

- 2001/95/EG
- 2011/65/EU

Applicable national standards and technical specifications:

- DIN EN 18 800
- DIN EN ISO 12 100
- DGUV Vorschrift 17 und 18
- EN 50581: 2013-02

Ludwigsburg, Germany, January 1st, 2021

Bernhard Wüstner

7. Disposal

It is prohibited to dispose of used electrical equipment with household refuse.

All TW AUDiO INTERNATIONAL GmbH products are so-called B2B-products. This means that they are sold by a commercial business to a commercial business. TW AUDiO products that bear the trash can symbol shown here may only be disposed of by TW AUDiO.

The loudspeaker owner is legally responsible for proper disposal of used devices that do not bear this symbol. This pertains to all products delivered prior to March 29, 2010. Nevertheless, TW AUDiO will also be happy to assist you in this case.

If you have any question regarding the disposal of used devices, please contact us under the following telephone number:

+49 (0) 71 41 - 48 89 89 0

Thus, TW AUDiO is in strict compliance with the Waste Electrical and Electronic Equipment Directive (2012/19/EU) for the protection of our environment.

TW AUDiO INTERNATIONAL is registered under the following WEEE-reg.-no. with the German National Register EAR as a B2B-manufacturer and distributor of electrical devices:

DE93295191

In countries outside of the European Union, comply with local regulations.

TW AUDiO INTERNATIONAL GmbH
Osterholzallee 140-2
71636 Ludwigsburg
Germany

Phone: + 49 (0) 71 41-48 89 89 0
Fax: + 49 (0) 71 41-48 89 89 99
E-Mail: info@twaudio.de
WWW: www.twaudio.de