TWAUDiO®

VERA RFEX | Assembly Manual

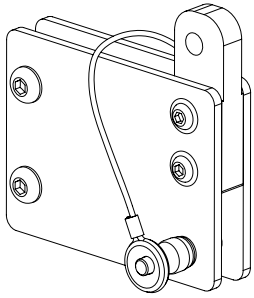

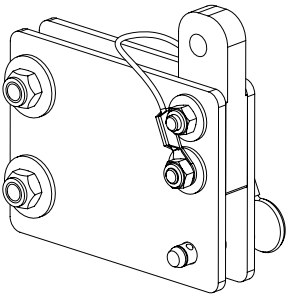

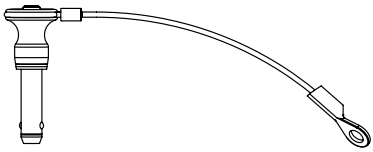

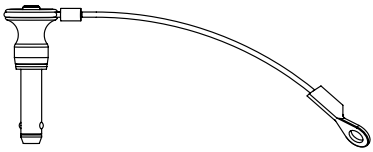

- ENGLISH -

Contents

1. Safety | Intended use..... 15
2. Overview..... 16
3. Purchased parts package..... 17
4. VERA RFEX right..... 18
5. VERA RFEX left 19
6. Locking pins mounting to VERA RF300 front..... 20
7. Disposal..... 21

Introduction

Thank you for choosing a high quality product „MADE IN GERMANY“ from TW AUDiO.

VERA RFEX is an adapter kit for the rigging frame VERA RF300.

The features of this accessory kit are its uncomplicated quick handing, its unobstrusive look and its ratio in size and weight.

If you lend your product to another party, inform that party of the safety-related handling procedures and hand over this assembly manual. Additional copies of the manual can be obtained through TW AUDiO free of charge or downloaded directly from our website: www.twaudio.com

Introduction in the assembly manual

Strictly adhere to the instructions contained in this assembly manual which are marked as follows:

WARNING

This symbol in combination with the signal word „Warning“ identifies a potentially hazardous situation. Failure to comply with this safety instruction can lead to serious injury or even death.

CAUTION

This symbol in combination with the signal word „Caution“ identifies a potentially hazardous situation. Failure to comply with this safety instruction can lead to light or moderate injury.

NOTE

This symbol in combination with the signal word „Note“ identifies a potentially hazardous situation. Failure to comply with this safety instruction can lead to product damage.

TIP

This symbol in combination with the signal word „Tip“ identifies additional information or notes that will simplify working with TW AUDiO products on the basis of practical experience.

Notes on the products

Read manual before use!

Before setting up the device, read the assembly manual carefully and keep this document in a safe place together with the VERA RFEX adapter kit.

General information

Assembly manual: AM-VERA_RFEX
Version 1.0 en, 03/2016, 3517
© by TW AUDiO 2016; all rights reserved.

All information contained in this assembly manual was correct to the best of our knowledge at the time of printing.

Quality warranties or assurance of suitability for a certain type of use based on the technical specifications, dimensions and weights are not granted by TW AUDiO.

TW AUDiO also shall not assume liability for any secondary damage (property damage and/or personal injury) nor for the failure to comply with this assembly manual.

TW AUDiO reserves the right to make changes that take into account the latest engineering advancements.

TW AUDiO is pleased to receive suggestions for improvement and recommendations on this assembly manual. Please send us any feedback you may have to the following e-mail address.

info@twaudio.com

TW AUDiO GmbH
Osterholzallee 140-2
71636 Ludwigsburg

Phone: +49 7141 488989-0
Fax: +49 7141 488989-99

1. Safety | Intended use

Please adhere to the following safety instructions to avoid risks when handling the adapter kit.

The VERA RFEX was developed for professional use in sound systems. The adapter kit may only be used by trained and qualified personnel.

Note the handling modes described in this assembly manual. Other uses are not permissible.

TW AUDiO shall not be liable for any damage that ensues from unintended use.

WARNING

Check that the adapter kit is complete and that all parts are in good condition before mounting them.

The accessory kit contains specific screws and nuts. Do not use other screws or nuts as these can damage the threads and threaded inserts.

WARNING

The VERA RF300 is only to be used with adapter kit VERA RFEX. Description for mounting is in the assembly manual. Other applications are not permissible.

All parts described in the manual (VERA RFEX right (pre-mounted), VERA RFEX left (pre-mounted), locking pins) are only to be used as described. Any other use is not permissible and may lead to injury and damage of the parts.

Any form of modifications of the elements is strictly prohibited. Risk of injury!

CAUTION

The rigging frame VERA RF300 and the adapter kit VERA RFEX are suitable for indoor and outdoor applications.

WARNING

The VERA RFEX should be handled by qualified and trained personal only. Before every use the VERA RFEX has to be checked if it is ready for use.

WARNING

Do not use the VERA RFEX if any form of damage is visible.

WARNING

Please keep all mounting elements away from children! The small parts can easily be swallowed and lead to suffocation!

2. Overview

The graphic below shows rigging frame VERA RF300 and adapter kit VERA RFEX when completely fitted.

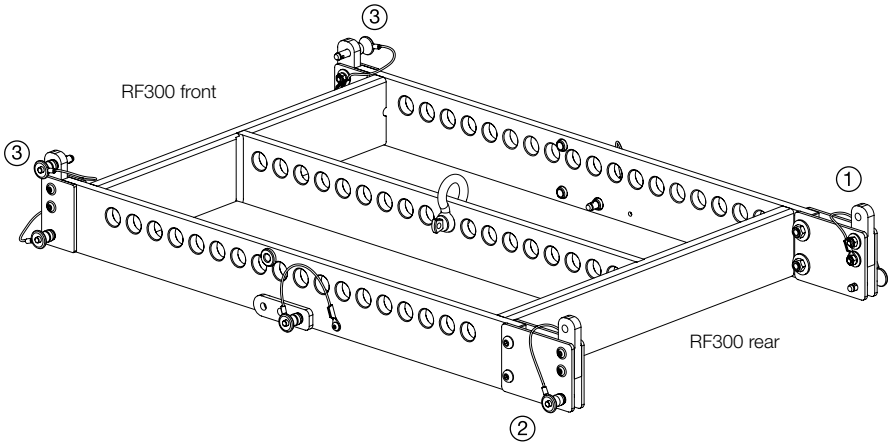

3. Purchased parts package

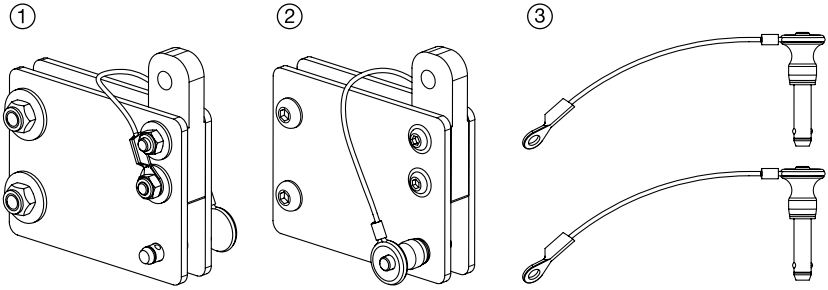

1. VERA RFEX right (pre-mounted)..... 1 pc
2. VERA RFEX left (pre-mounted)..... 1 pc
3. Locking pin (for mounting to VERA RF300 front).....2 pcs

Needed tools:

Wrench SW13,
Wrench SW10.

Torque wrench equipped with
Torx 25,
Torx 30.

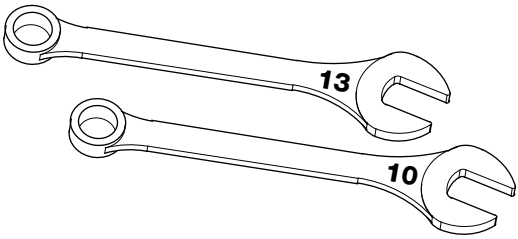

4. VERA RFEX right

NOTE

In order to mount VERA RFEX right (pre-mounted), loosen the nuts as shown in graphic below.

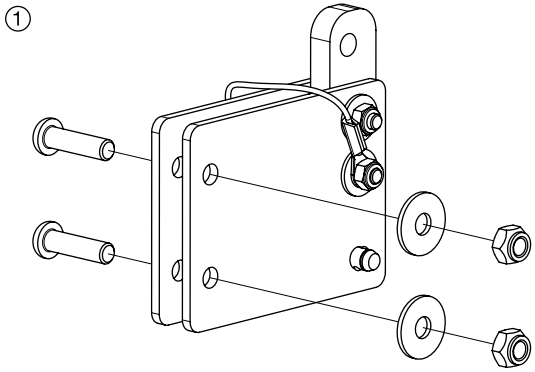

NOTE

Mount the VERA RFEX right (pre-mounted) on rigging frame VERA RF300 as shown in graphic below.
Use Torx 30 and wrench SW13.

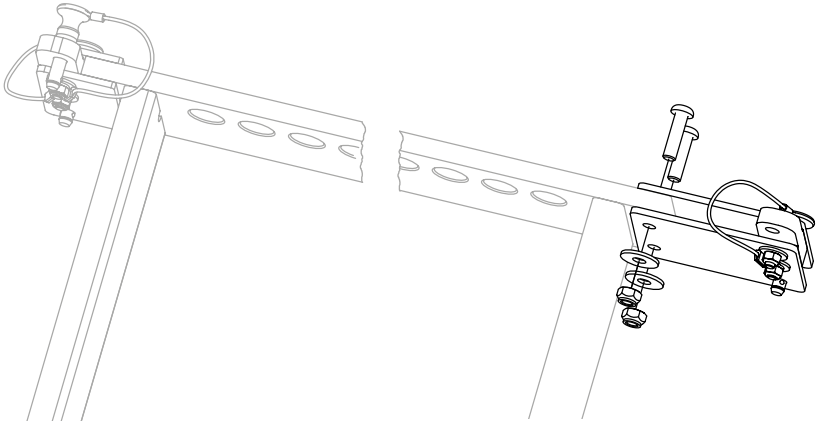

CAUTION

Tighten nuts with torque wrench, 18Nm!

5. VERA RFEX left

NOTE

In order to mount VERA RFEX left (pre-mounted), loosen the nuts as shown in graphic below.

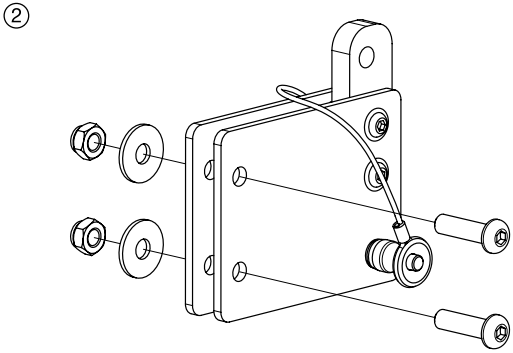

NOTE

Mount the VERA RFEX left (pre-mounted) on rigging frame VERA RF300 as shown in graphic below.
Use Torx 30 and wrench SW13.

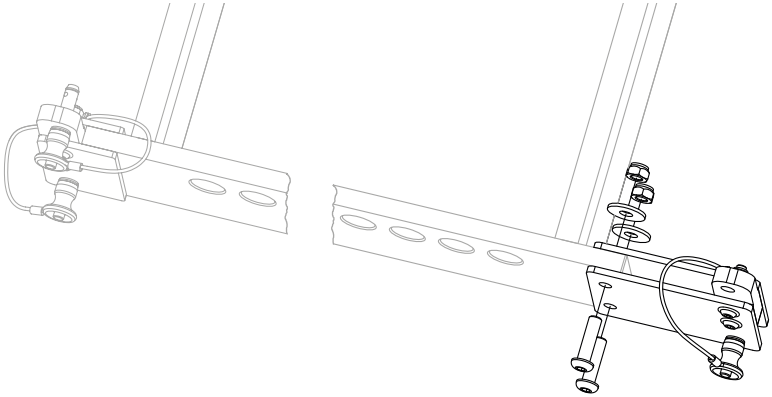

CAUTION

Tighten nuts with torque wrench, 18Nm!

6. Locking pin mounting to VERA RF300 front

NOTE

Assembly of locking pins contained in the purchased parts package.

Loosen the nuts and place the locking pins as shown in graphic below.
Repeat on the other side.

Use Torx 25 and wrench SW10.

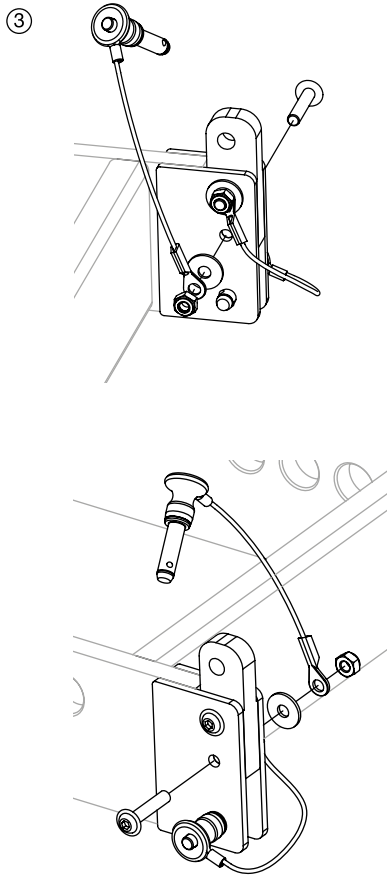

CAUTION

Tighten nuts with torque wrench, 18Nm!

7. Disposal

All products of TW AUDiO GmbH are so-called B2B products. This means that they are sold by a commercial business to a commercial business. TW AUDiO products that bear the trash can symbol shown here are only permitted to be disposed of by TW AUDiO.

If you have any question regarding the disposal of used devices, please contact us under the following telephone number:

+49 7141 488989-0

In countries outside of the European Union, follow the local regulations.

TW AUDiO GmbH
Osterholzallee 140-2
71636 Ludwigsburg

P: + 49 7141 488989-0
F: + 49 7141 488989-99
E: info@twaudio.com
W: www.twaudio.com

TWAUDiO® VERA RFEX | 2016-3 | 3517