TWAUDiO®

VERA ORF900

Assembly Instructions

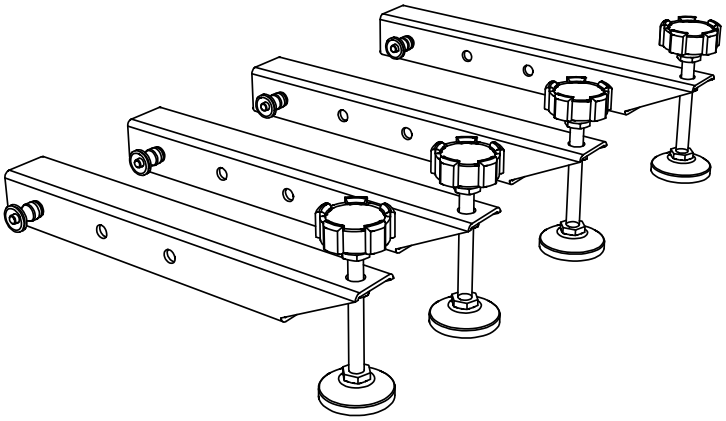

Introduction

Thank you for choosing a high-quality product “MADE IN GERMANY” from the brand TW AUDiO.

The VERA ORF900 outrigger is an accessory for the VERA RF600 and VERA RF900 rigging frames.

It is characterized by a subtle look, a remarkable size to weight ratio and ease of use.

If you lend your product to another party, inform that party of the safety-related operating procedures and hand over this assembly guide. If you require additional copies of this manual, you can obtain them free of charge from TW AUDiO or download them from www.twaudio.de

Instructions in this setup manual

Strictly adhere to the instructions contained in this operating manual that are marked as follows:

This symbol in combination with the signal word “Warning” identifies a potentially hazardous situation. Failure to comply with this safety instruction can lead to serious injury or even death.

This symbol in combination with the signal word “Caution” identifies a potentially hazardous situation. Failure to comply with this safety instruction can lead to light or moderate injury.

This symbol in combination with the signal word “Note” identifies a potentially hazardous situation. Failure to comply with this safety instruction can lead to product damage.

This symbol in combination with the signal word “Tip” identifies additional information or notes that will simplify working with TW AUDiO products on the basis of practical experience.

Notes on the products

Read manual before use!

Before using the outrigger, carefully read the assembly instructions and keep the instructions in a safe place together with the VERA ORF900 outrigger.

General Information

Assembly Guide: OM-VERA ORF900
Version 3.0 d, 02/2026
© by TW AUDiO INTERNATIONAL GmbH 2026; all rights reserved.

All information contained in this operating manual was correct to the best of our knowledge at the time of printing.

Quality warranties or assurance of suitability for a certain type of use based on the technical specifications, dimensions and weights are not granted by TW AUDiO.

TW AUDiO also shall not assume liability for any secondary damage (property damage and/or personal injury) nor for the failure to comply with this operating manual!

TW AUDiO reserves the right to update this document based on recent developments.

TW AUDiO INTERNATIONAL GmbH
Osterholzallee 140-2
71636 Ludwigsburg
Germany

Phone : + 49 (0) 71 41-48 89 89 0
Fax: + 49 (0) 71 41-48 89 89 99
E-Mail: info@twaudio.de
WWW: www.twaudio.de

Table of contents

1. Safety | Intended use 5
2. Overview 6
2.1 Scope of delivery 6
2.2 Placement the VERA ORF900 for storage on the VERA RF600 or VERA RF900 7
3. Technical specifications 8
3.1 Data sheet 8
4. Commissioning 8
4.1 Setup 8
4.2 Assembly rear: VERA ORF900 outrigger attached to VERA RF600 rigging frame 9
4.3 Assembly rear: VERA ORF900 outrigger attached to VERA RF900 rigging frame 10
4.4 Assembly front: VERA ORF900 outrigger attached to VERA RF600 rigging frame 11
4.5 Assembly front: VERA ORF900 outrigger attached to VERA RF900 rigging frame 12
4.6 Ground 13
4.7 Alignment 14
4.8 Pitfalls 15
4.9 Danger of tipping over 15
4.10 Wind load 15
5. Transport and Storage 16
6. CE Declaration of Conformity 17
7. Disposal 17

1. Safety | Intended use

Please adhere to the following safety instructions to avoid risks when using accessories.

The VERA ORF900 outrigger was developed for use in professional sound systems. The outrigger may only be used by trained and qualified personnel.

Note the operating modes described in this assembly instructions. Other uses are not permissible.

Damage caused by improper use is not covered by TW AUDiO.

WARNING

Before each installation, check the integrity of the VERA ORF900 outrigger set and ensure that all components are in perfect condition.

The scope of delivery includes specified quick-lock pins. Only use this quick-lock pins.

WARNING

The VERA ORF900 outrigger set may only be used with the VERA RF600 or VERA RF900 rigging frame.

These assembly instructions describe how to use the VERA ORF900 outrigger set. Any other use shall be deemed improper and may result in damage or even injury.

Modifications or alterations to individual parts of the VERA ORF900 outrigger set are not permitted! Danger to life!

WARNING

During and after each system setup, check that all quick-lock pins are always completely inserted! All quick-lock pins must always be used!

CAUTION

The VERA ORF900 is an accessory designed both for indoor and outdoor use.

WARNING

The VERA ORF900 outrigger set may only be used by trained and qualified personnel. Personnel must check the VERA ORF900 for its full suitability before each use.

WARNING

When visible damage to any part of the VERA ORF900 outrigger set is detected, it must be decommissioned immediately.

2. Overview

2.1 Scope of delivery

NOTE

The VERA ORF900 consists of four outrigger with spindle feet and quick-lock pins.
Screw all spindle feet of the outrigger set VERA ORF900 to the specified dimension which is shown at figure 2.1.

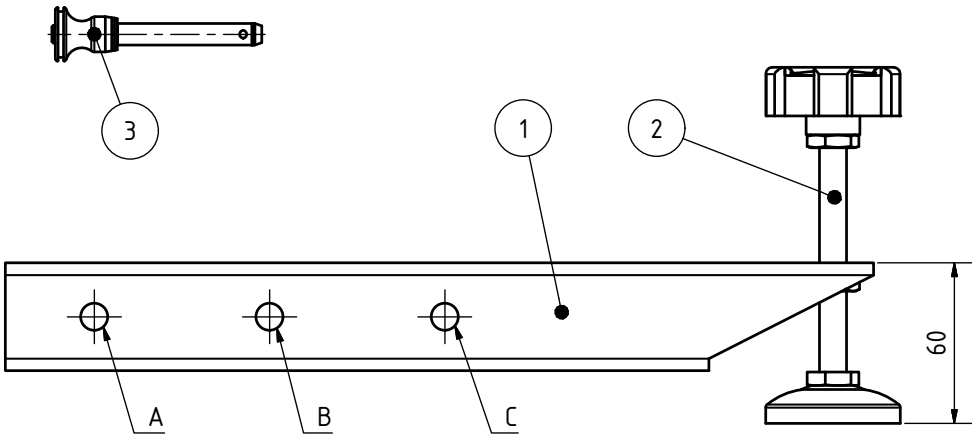

Figure 2.1 - VERA ORF900 Outrigger

1. Outrigger
2. Spindle feet
3. Quick-locking pin

NOTE

When the VERA ORF900 outrigger set is delivered from the factory, the quick-locking pins are in hole A.

2.2 Placement the VERA ORF900 for storage on the VERA RF600 or VERA RF900

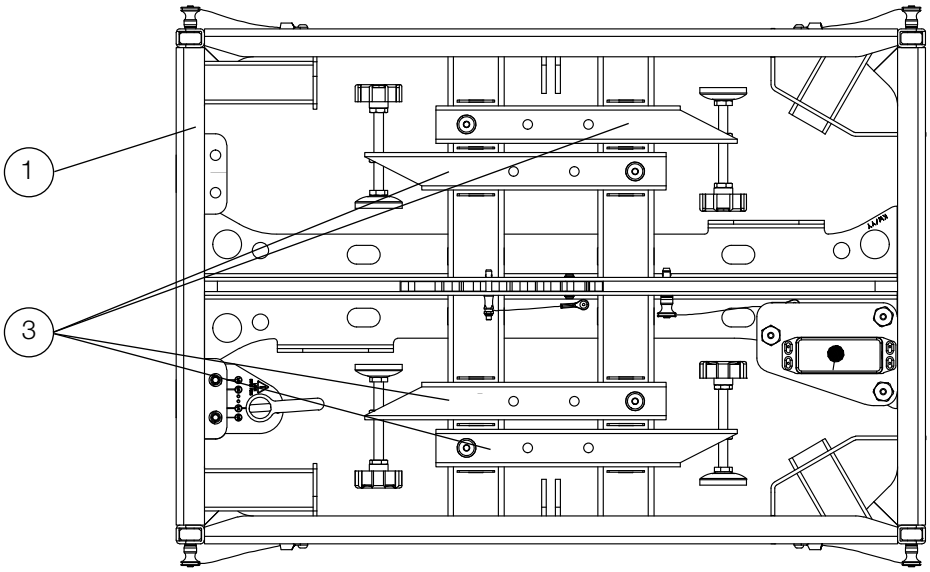

Figure 2.2.1 - Overview VERA RF600

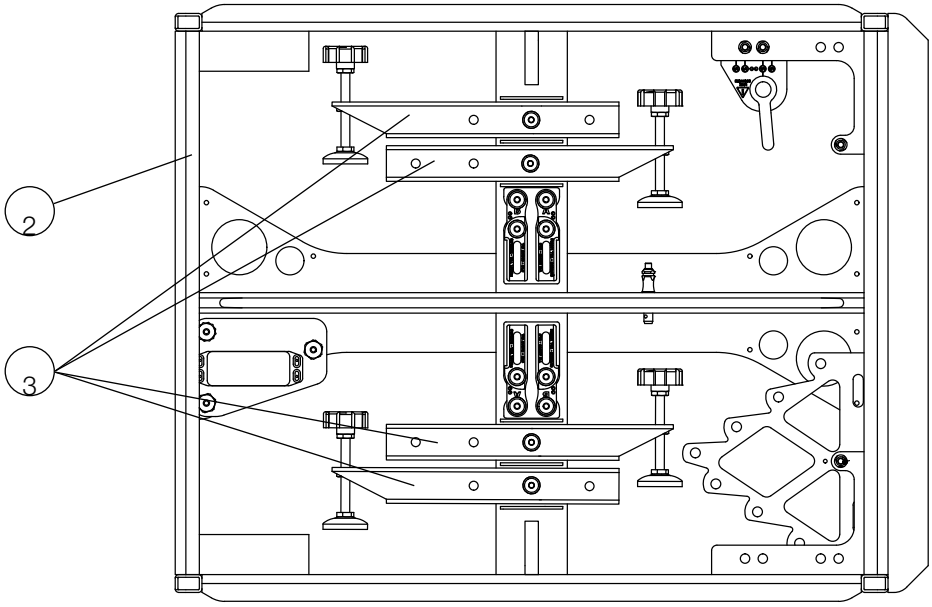

Figure 2.2.2 - Overview VERA RF900

1. Rigging frame VERA RF600
2. Rigging frame VERA RF900
3. Outrigger VERA ORF900

WARNING

For storage, first insert all quick-lock pins through the mounting holes of the VERA ORF900 outrigger set and then through the mounting holes on the VERA RF600 or VERA RF900 rigging frame.

Make sure that each outrigger is securely attached to the VERA RF600 or VERA RF900 rigging frame.

3. Technical specifications

3.1 Data sheet

Weight	4,7 kg (10,36 lbs)
Surface	Powder coated

4. Commissioning

4.1 Setup

The VERA ORF900 Outrigger is designed for groundstack operation. TW AUDiO provides a wide range of accessories to securely attach the outrigger.

WARNING

Please note that setting up the system setups always requires two persons!

WARNING

Make sure that all system structures are located on a firm, level surface and that the surface can bear the total weight!

NOTE

TW AUDiO recommends using only the accessories specified by TW AUDiO for securing and mounting the outrigger.

4.2 Assembly rear: VERA ORF900 outrigger attached to VERA RF600 rigging frame

WARNING

1. Insert the first outrigger into the square tube on the VERA RF600 rigging frame at the rear left position. Attach the outrigger to the rigging frame by means of a quick-lock pin. If possible, use the outermost mounting hole A on the outrigger.

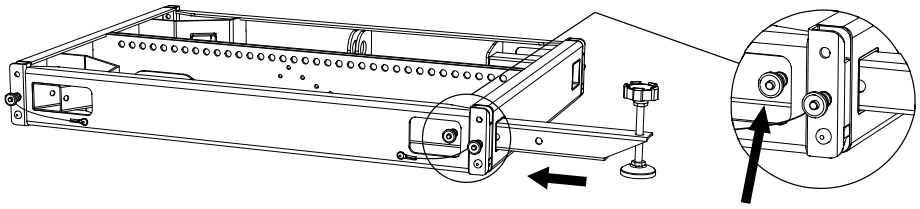

Figure 4.2.1 – Rear-mounting the VERA ORF900 outrigger on the VERA RF600

WARNING

2. Insert the second outrigger into the square tube on the VERA RF600 rigging frame at the rear right position. Attach the outrigger to the rigging frame by means of a quick-lock pin. If possible, use the outermost mounting hole A on the outrigger.

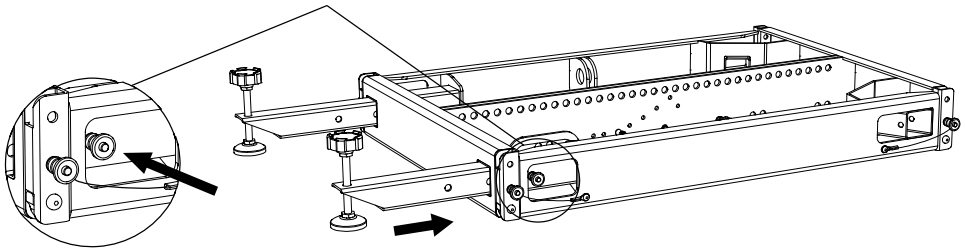

Figure 4.2.2 – Rear-mounting the VERA ORF900 outrigger on the VERA RF600

WARNING

3. Always insert all quick-lock pins completely through all square tubes (see figure 4.2.3 right).

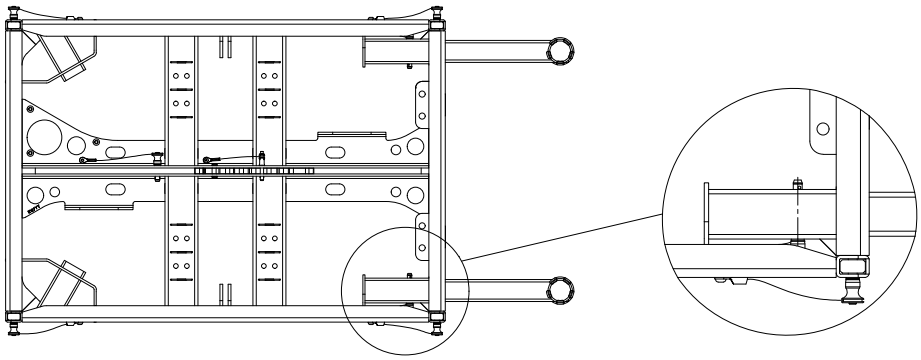

Figure 4.2.3 – Rear-mounting the VERA ORF900 outrigger on the VERA RF600

4.3 Assembly rear: VERA ORF900 outrigger attached to VERA RF900 rigging frame

WARNING

1. Insert the first outrigger into the square tube on the VERA RF900 rigging frame at the rear left position. Attach the outrigger to the rigging frame by means of a quick-lock pin. If possible, use the outermost mounting hole A on the outrigger.

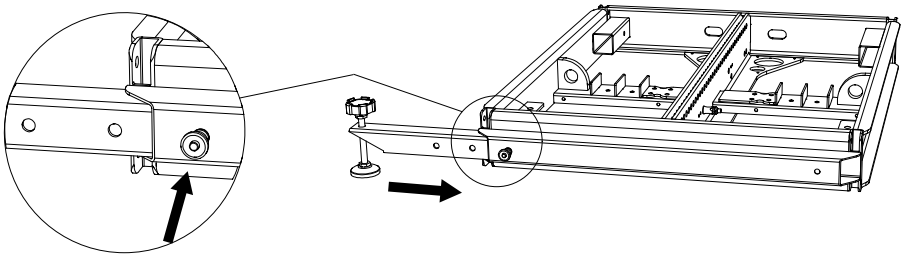

Figure 4.3.1 – Rear-mounting the VERA ORF900 outrigger on the VERA RF900

WARNING

2. Insert the second outrigger into the square tube on the VERA RF900 rigging frame at the rear right position. Attach the outrigger to the rigging frame by means of a quick-lock pin. If possible, use the outermost mounting hole A on the outrigger.

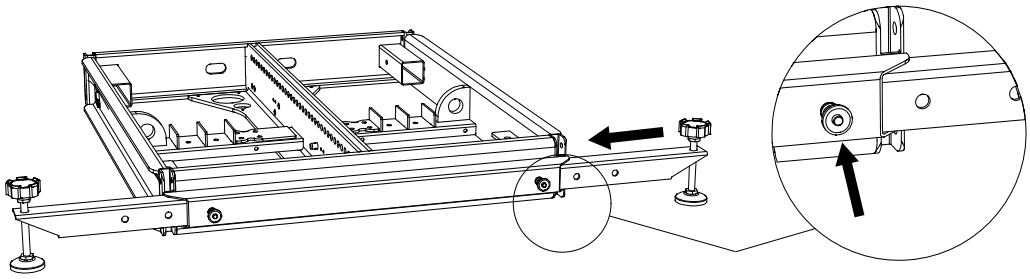

Figure 4.3.2 – Rear-mounting the VERA ORF900 outrigger on the VERA RF900

WARNING

3. Always insert all quick-lock pins completely through all square tubes (see figure 4.3.3 right).

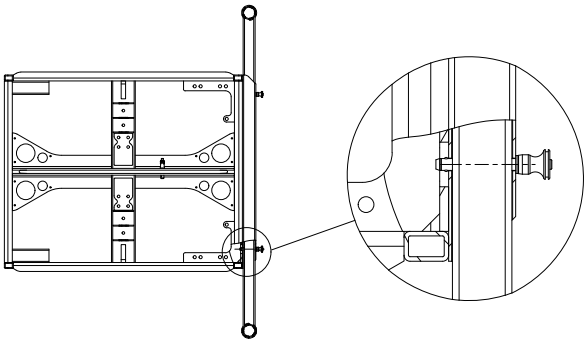

Figure 4.3.3 – Rear-mounting the VERA ORF900 outrigger on the VERA RF900

4.4 Assembly front: VERA ORF900 outrigger attached to VERA RF600 rigging frame

WARNING

1. Insert the third outrigger into the square tube on the VERA RF600 rigging frame at the front left position. Attach the outrigger to the rigging frame by means of a quick-lock pin. If possible, use the outermost mounting hole A on the outrigger.

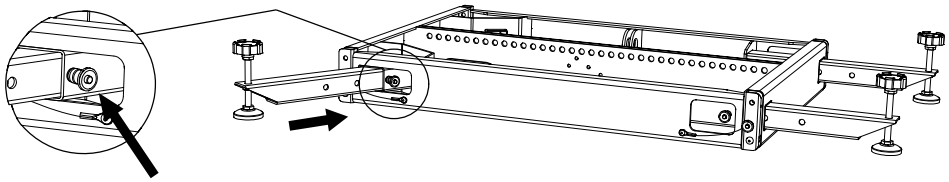

Figure 4.4.1 – Front-mounting the VERA ORF900 outrigger on the VERA RF600

WARNING

2. Insert the fourth outrigger into the square tube on the VERA RF600 rigging frame at the front right position. Attach the outrigger to the rigging frame by means of a quick-lock pin. If possible, use the outermost mounting hole A on the outrigger.

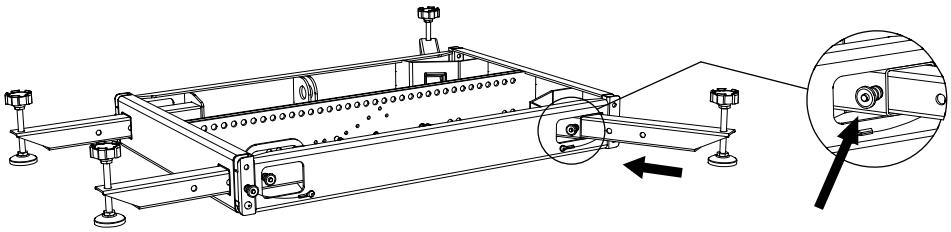

Figure 4.4.2 – Front-mounting the VERA ORF900 outrigger on the VERA RF600

WARNING

3. Always insert all quick-lock pins completely through all square tubes (see figure 4.4.3 left).

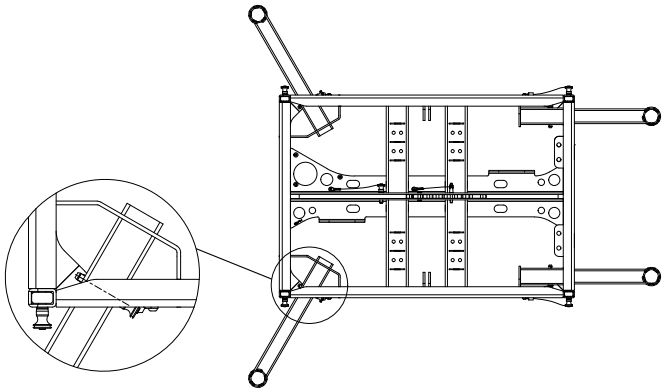

Figure 4.4.3 – Front-mounting the VERA ORF900 outrigger on the VERA RF600

4.5 Assembly front: VERA ORF900 outrigger attached to VERA RF900 rigging frame

WARNING

1. Insert the third outrigger into the square tube on the VERA RF900 rigging frame at the front left position. Attach the outrigger to the rigging frame by means of a quick-lock pin. If possible, use the outermost mounting hole A on the outrigger.

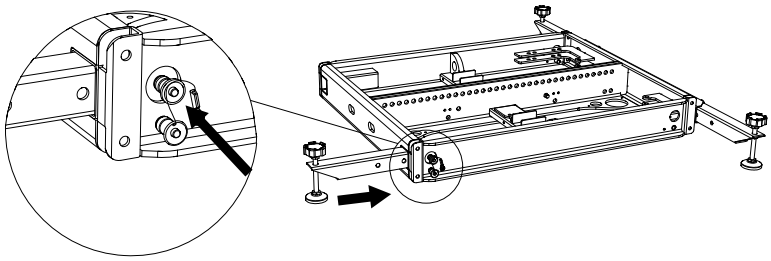

Figure 4.5.1 – Front-mounting the VERA ORF900 outrigger on the VERA RF900

WARNING

2. Insert the fourth outrigger into the square tube on the VERA RF900 rigging frame at the front right position. Attach the outrigger to the rigging frame by means of a quick-lock pin. If possible, use the outermost mounting hole A on the outrigger.

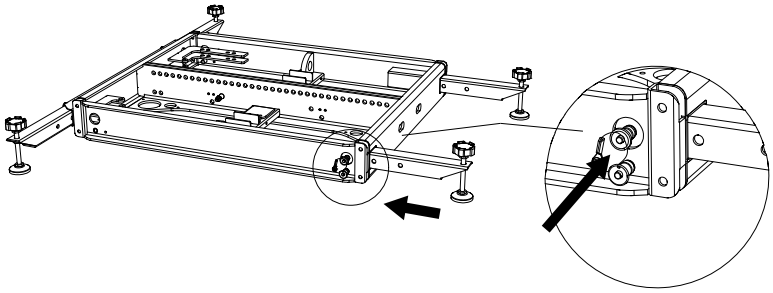

Figure 4.5.2 – Front-mounting the VERA ORF900 outrigger on the VERA RF900

WARNING

3. Always insert all quick-lock pins completely through all square tubes (see figure 4.5.3 left).

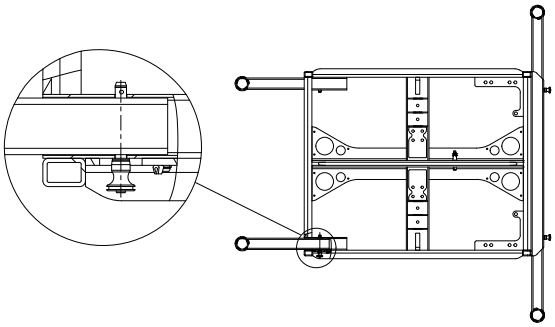

Figure 4.5.3 – Front-mounting the VERA ORF900 outrigger on the VERA RF900

4.6 Ground

WARNING

1. When setting up a system on uneven surfaces, such as gravel or grass, always put a pressure-resistant surface under all four spindle feet!
2. Make sure that all four spindle feet rest completely on the pressure-resistant shims and that the surface can withstand the total weight.
3. Note that depending on the system design, either the front or rear spindle feet may be able to carry more weight.

WARNING

4. Turn all four Outrigger spindle feet until the VERA RF600 or VERA RF900 rigging frame is completely lifted off the ground. The rigging frame itself must not be in contact with the ground

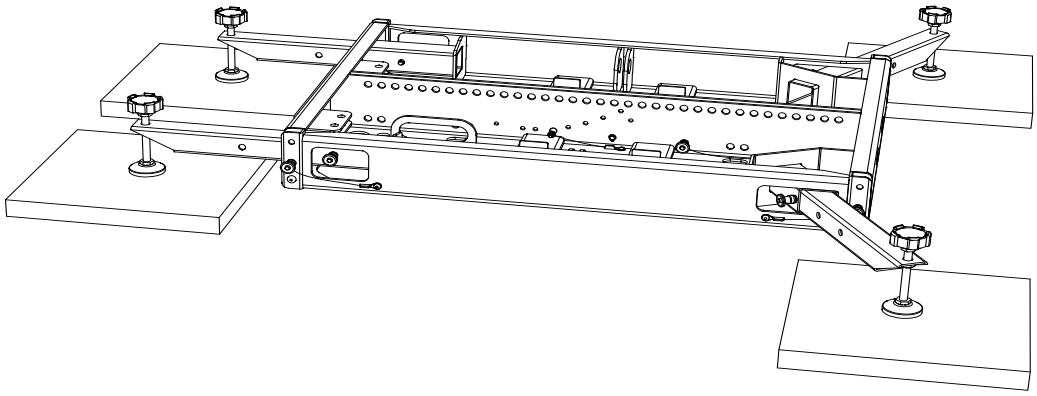

Figure 4.6 – Rigging frame resting only on the spindle feet

4.7 Alignment

WARNING

Always level the VERA RF600 or VERA RF900 rigging frame using a spirit level before commencing system construction. To do so, turn the spindle feet.

Make sure that the VERA RF600 or VERA RF900 rigging frame rests completely on the spindle feet.

Follow these steps:

Step 1: Front alignment

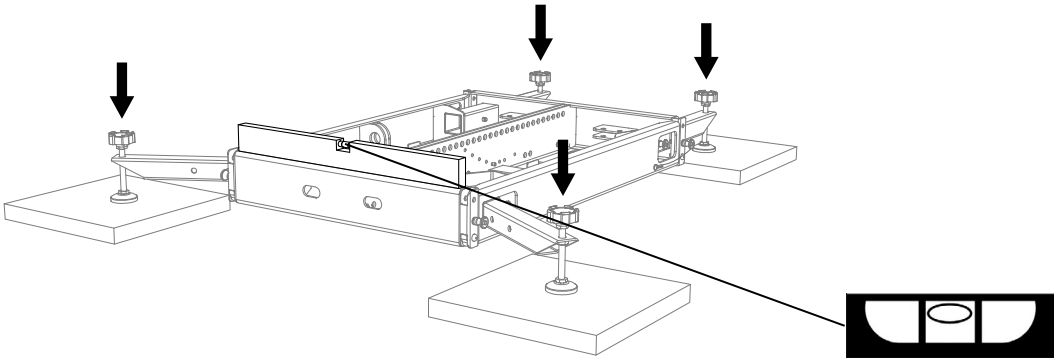

Figure 4.7.1 – Rigging frame front alignment

Step 2: Rear alignment

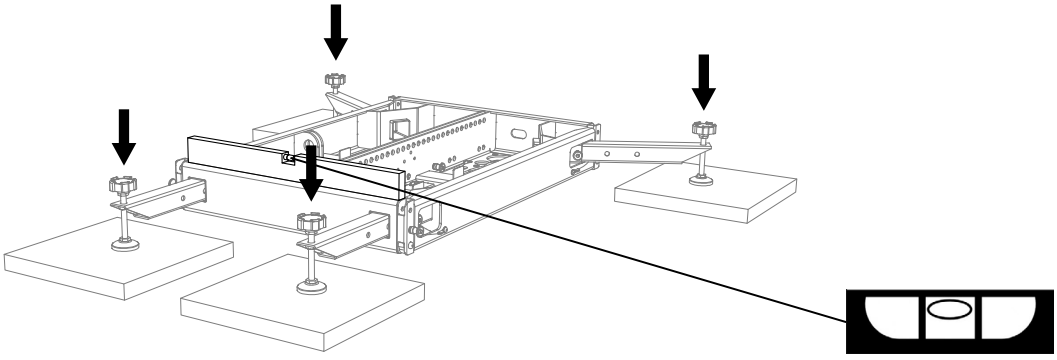

Figure 4.7.2 – Rigging frame rear alignment

Step 3: Side alignment

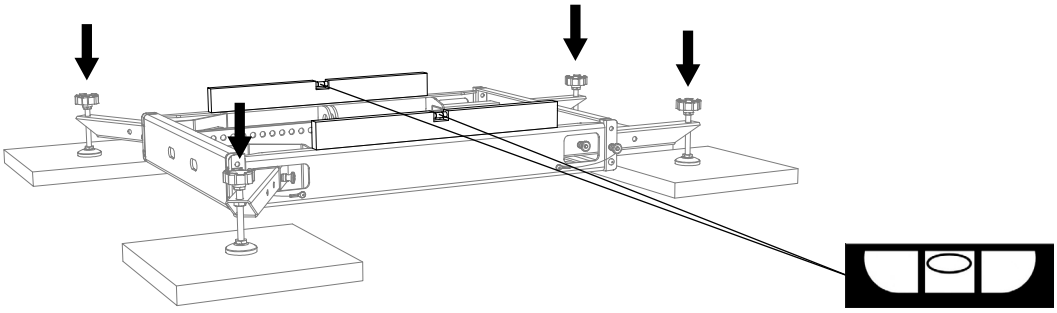

Figure 4.7.3 – Rigging frame side alignment

4.8 Pitfalls

WARNING

Make sure that no one can trip over your system structures, or over individual components! This is especially true for all pressure-resistant shims and spindle feet!

4.9 Danger of tipping over

WARNING

For each downtilt system structure, make sure that the center of gravity never exceeds the front spindle feet!

Secure the entire downtilt system structure against tipping!

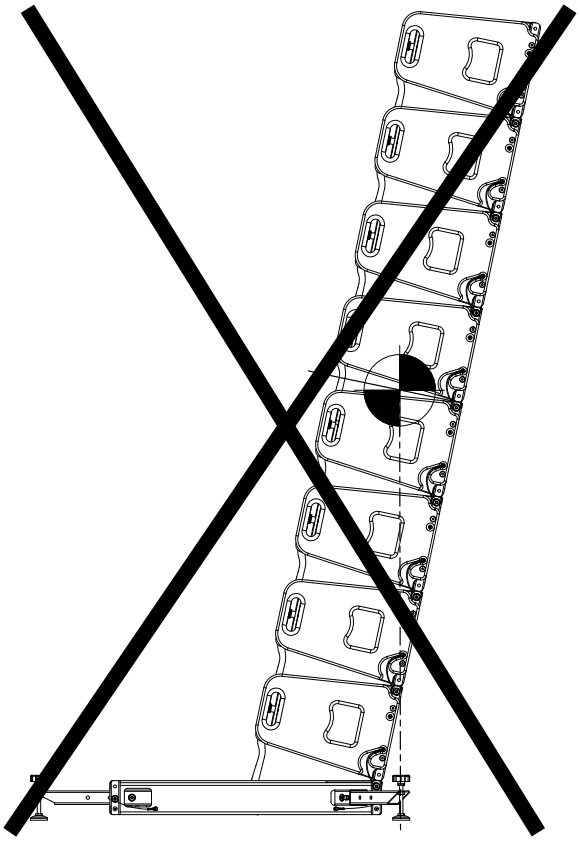

WARNING

Figure 4.9 – System structure - Danger of tipping

4.10 Wind load

WARNING

Before setting up the system outdoors, consider unforeseeable wind conditions at the operation site!

In the event of imminent danger, dismantle your system structures immediately!

5. Transport and Storage

NOTE

Ensure that the surface of the outrigger is not damaged during transport and storage. Moisture may penetrate where steel surfaces are exposed by scratches and result in corrosion.

This is why the product should be transported and stored in a safe, careful, dry and largely dust-free manner.

The original packaging is not suitable as permanent storage and transport packaging.

6. CE Declaration of Conformity

Copy and translation of the original CE Conformity Declaration:

We hereby declare that the below-referenced components by virtue of their design and construction, and in the configuration placed on the market by us, satisfy the safety and health requirements of the applicable EC directives. This declaration becomes invalid in case of modifications that have not been approved by us.

This declaration applies to the following components

- VERA ORF900

as well as all model variants based on these, provided that they correspond to the original factory models and have not been technically modified in any way.

Applicable directives:

- 2001/95/EG

Applicable national standards and technical specifications:

- DIN EN 18 800
- DIN EN ISO 12 100
- DGUV Vorschrift 17 und 18

Ludwigsburg, Germany, January 1st, 2021

Bernhard Wüstner

7. Disposal

If you have any question regarding the disposal of used devices, please contact us under the following telephone number:

+49 (0) 71 41 - 48 89 89 0

In countries outside of the European Union, comply with local regulations.

TW AUDiO INTERNATIONAL GmbH
Osterholzallee 140-2
71636 Ludwigsburg
Germany

Phone: + 49 (0) 71 41-48 89 89 0
Fax: + 49 (0) 71 41-48 89 89 99
E-Mail: info@twaudio.de
WWW: www.twaudio.de