TWAUDIO®

VERA DL10 | Operating manual

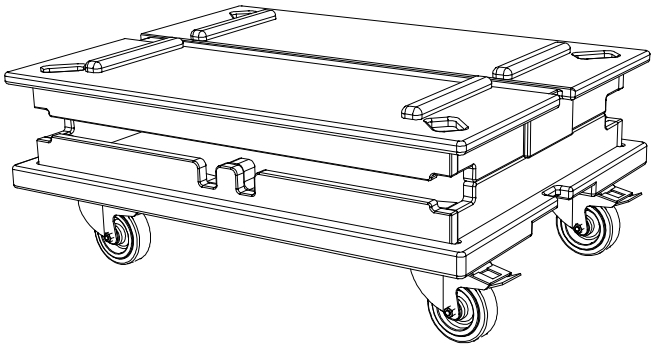

Introduction

Thank you for choosing a high-quality product “MADE IN GERMANY” from TW AUDiO.

The VERA DL10 dolly is an accessory for the VERA10 loudspeaker and VERA RF300 rigging frame.

This accessory set is characterized by a subtle look, a remarkable size to weight ratio and ease of use.

If you lend your product to another party, inform that party of the safety-related operating procedures and hand over this assembly guide. If you require additional copies of this manual, you can obtain them free of charge from TW AUDiO or download them from www.twaudio.de

Instructions in this user manual

Strictly adhere to the instructions contained in this operating manual that are marked as follows:

This symbol in combination with the signal word “Warning” identifies a potentially hazardous situation. Failure to comply with this safety instruction can lead to serious injury or even death.

This symbol in combination with the signal word “Caution” identifies a potentially hazardous situation. Failure to comply with this safety instruction can lead to light or moderate injury.

This symbol in combination with the signal word “Note” identifies a potentially hazardous situation. Failure to comply with this safety instruction can lead to product damage.

This symbol in combination with the signal word “Tip” identifies additional information or notes that will simplify working with TW AUDiO products on the basis of practical experience.

Notes on the products

Read manual before use!

Before using the device, carefully read the operating manual and keep it with the VERA DL10 dolly.

General information

Operation manual: OM-VERA DL10
Version 1.0 en, 03/2019
© by TW AUDiO 2019; all rights reserved.

All information contained in this operating manual was correct to the best of our knowledge at the time of printing.

Quality warranties or assurance of suitability for a certain type of use based on the technical specifications, dimensions and weights are not granted by TW AUDiO.

TW AUDiO also shall not assume liability for any secondary damage (property damage and/or personal injury) nor for the failure to comply with this operating manual!

TW AUDiO reserves the right to update this document based on recent developments.

TW AUDiO GmbH
Osterholzallee 140
71636 Ludwigsburg

Phone : + 49 (0) 71 41-48 89 89 0
Fax: + 49 (0) 71 41-48 89 89 99
E-Mail: info@twaudio.de
WWW: www.twaudio.de

Content

1. Safety | Intended use 5
2. Overview 6
2.1 Components 6
3. Technical specifications 7
3.1 Data sheet 7
4. Commissioning 8
4.1 Using VERA DL10 dolly with VERA10 loudspeaker 8
5. Transport and Storage 10
6. CE Conformity Declaration 11
7. Disposal 11

1. Safety | Intended use

To avoid risks please observe the following safety instructions when using accessories.

The VERA DL10 dolly was developed for professional use in sound systems. The dolly may only be used by trained and qualified personnel.

Note the operating modes described in this operating manual. Other uses are not permissible.

Damage caused by improper use is not covered by TW AUDiO.

WARNING

Before each use, check the integrity of the VERA DL10 dolly and ensure that all components are in perfect condition.

WARNING

The VERA DL10 dolly may only be used with the VERA10 loudspeaker.

These operating manual describe how to use the VERA DL10 dolly. Any other use shall be deemed improper and may result in damage or even injury.

Modifications or alterations to individual parts of the VERA DL10 dolly are not permitted! Danger to life!

CAUTION

The VERA DL10 is an accessory designed both for indoor and outdoor use.

WARNING

The VERA DL10 dolly may only be used by trained and qualified personnel. Personnel must check the VERA DL10 for its full suitability before each use.

WARNING

When visible damage to any part of the VERA DL10 dolly is detected, it must be decommissioned immediately.

WARNING

When moving the VERA DL10 dolly, ensure full load-bearing capacity and stability of the substrate.

The VERA DL10 dolly is specified for a load of not more than twelve VERA10 loudspeaker and two VERA RF300 rigging frames. This load capacity must never be exceeded!

WARNING

During movement (assembly or dismantling, transport to the place of use) of the VERA DL10 dolly with the VERA10 loudspeaker and VERA RF300 rigging frame, ensure sufficient space to prevent collisions with other objects.

2. Overview

2.1 Components

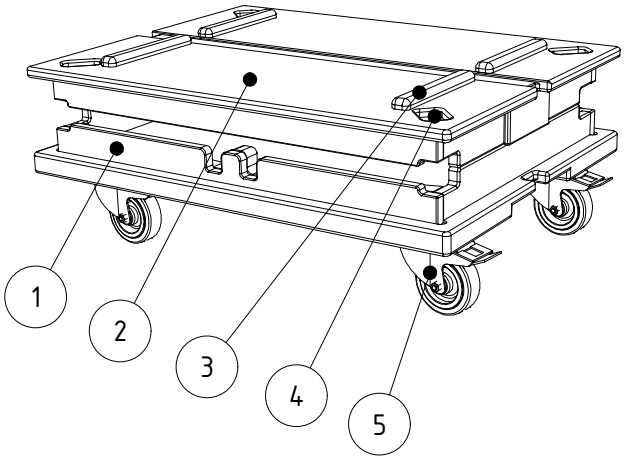

Figure 2.1 - Overview

1. Dolly bottom - Surface Polyurea-coated
2. Dolly top - Surface Polyurea-coated
3. Guide rails for the VERA RF300 rigging frame
4. Recesses for stacking the dollys (4 pieces)
5. 100mm castor with stopper (2 pieces)

3. Technical specifications

3.1 Data sheet

Maximum load capacity	12x VERA10 and 2x VERA RF300
Dimensions (h x w x d)	800 x 600 x 330 mm (31.5 x 23.6 x 13 in)
Weight	25,4 kg (56 lbs)
Surface	Polyurea-coated

4. Commissioning

4.1 Using VERA DL10 dolly with VERA10 loudspeaker

WARNING

Please note that two persons are always required to set up the VERA DL10 dolly with the VERA10 loudspeaker and VERA RF300 rigging frame!

WARNING

Attach all VERA10 loudspeaker and VERA RF300 rigging frames to the VERA DL10 dolly! Use a lashing strap with a ratchet.

Make sure that the lashing strap is pulled tightly and without twisting around the loudspeakers, rigging frames and the dolly. (see figure 4.1)

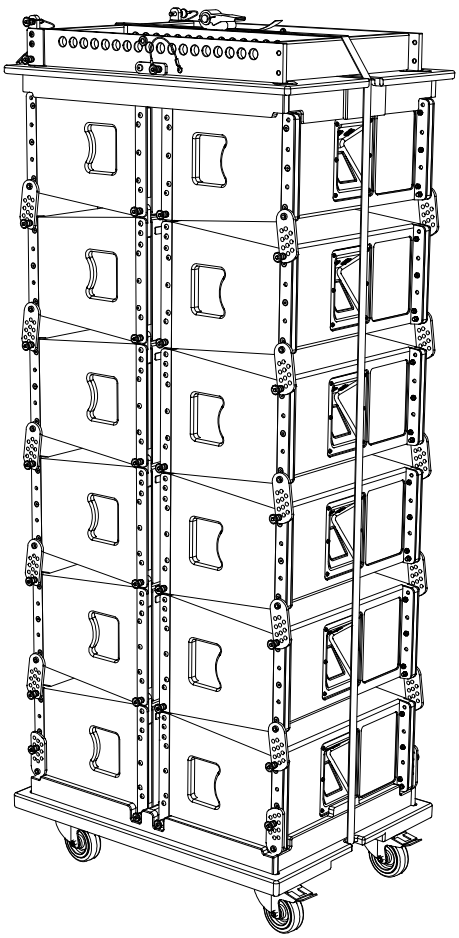

Figure 4.1 - Transport setup VERA10 loudspeaker with VERA DL10

WARNING

Move the transport setup longitudinally to avoid overturning during transport.

When moving the VERA DL10 dolly transport setup with the VERA10 loudspeaker and VERA RF300 rigging frame, note that there is a risk of tipping due to the high center of gravity.

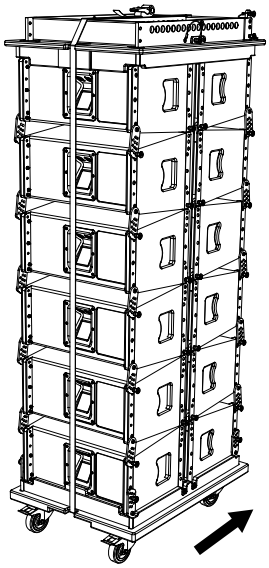

Figure 4.2 - Moving VERA10 loudspeaker with VERA DL10

TIP

The VERA DL10 dolly can be stacked for storage. For this purpose, recesses (see figure 2.1 - Pos.4) are provided in the dolly (see figure 2.1 - Pos.2).

WARNING

When moving the stacked VERA DL10 dolly, note that there is a risk of tipping on each individual VERA DL10 dolly.

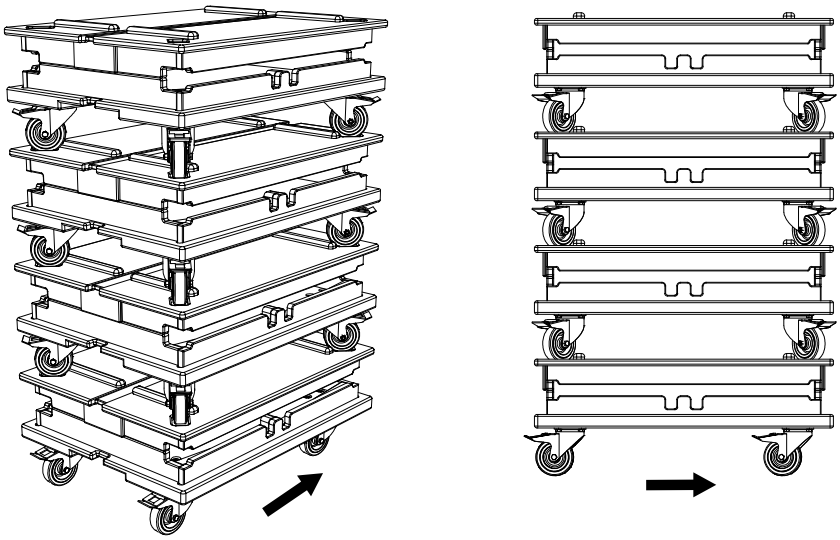

Figure 4.3 - Stacking the VERA DL10 dolly

5. Transport and Storage

NOTE

Ensure that the surface of the rigging frame is not damaged during transport and storage. Moisture may penetrate where steel surfaces are exposed by scratches and result in corrosion.

This is why the product should be transported in a safe, careful, dry and largely dust-free manner.

The following transport and storage accessories are available from TW AUDiO:

- Lashing strap

The original packaging is not suitable as permanent storage and transport packaging.

6. CE Conformity Declaration

Copy and translation of the original CE Conformity Declaration:

We hereby declare that the below-referenced components by virtue of their design and construction, and in the configuration placed on the market by us, satisfy the safety and health requirements of the applicable EC directives. This declaration becomes invalid in case of modifications that have not been approved by us.

This declaration applies to the following components

• VERA DL10

as well as all model variants based on these, provided that they correspond to the original factory models and have not been technically modified in any way.

Applicable directives:

• 2001/95/EG

Applicable national standards and technical specifications:

• DIN EN ISO 12 100
• DGUV Vorschrift 17 und 18

Ludwigburg, Germany, July 1st, 2010

Tobias Wüstner

7. Disposal

If you have any question regarding the disposal of used devices, please contact us under the following telephone number:

+49 (0) 71 41 - 48 89 89 0

In countries outside of the European Union, comply with local regulations.

TW AUDiO GmbH
Osterholzallee 140
71636 Ludwigsburg

Phone : + 49 (0) 71 41-48 89 89 0
Fax: + 49 (0) 71 41-48 89 89 99
E-Mail: info@twaudio.de
WWW: www.twaudio.de