V2.3

TORUS

Constant Curvature Array

User Guide

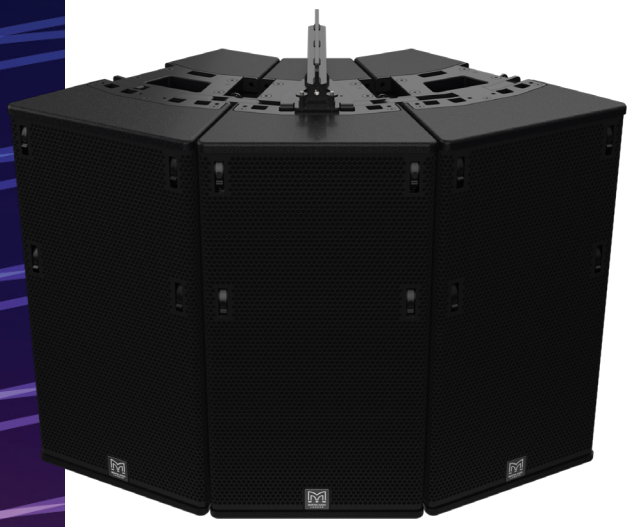

TORUS

MARTIN AUDIO
LONDON

Contents

Introduction

TORUS 4
Important Safety Instructions 5
Unpacking the Units 5

System Overview

TORUS 6
Mechanical Design 6
Acoustic Design 7
Landscape Deployment 7
Portrait Deployment 8
Changing Horn Dispersion 8

Accessories

POLERIG1530 9
T12GRID 9
SBAR40 9
HRIG100 9
T12TRIG 10
T12PB 10
GSRIG1530 10
SCS250 10

Recommended Subwoofer

SXCF118 11

Amplification

iKON Amplifiers 12

DISPLAY 3

Overview 13

VU-NET 2

Overview 16

Connections

Overview 21

Copyright © 2026 Martin Audio Ltd.

Rigging

Overview 22
T12GRID 23
HRIG100 29
T12TRIG 33
GSRIG1530 38
T12PB 44
POLERIG1530 47
SBAR40 49

Essential Maintenance

Replacing the LF Driver 51
Replacing the High Frequency Diaphragms 53
Remove the 6 rubber bungs from the horn flare 53
Remove the socket cap fasteners from the horn to remove the compression driver. 54
Remove the socket cap fasteners from the backplate to replace the diaphragm 54

Specifications

T1215 and T1230 55

Technical Drawings

T1215 56
T1230 57

Warranty

Warranty Statement 58

Copyright © 2026 Martin Audio Ltd.

Introduction

TORUS

For applications that typically require a throw between 15-30m, a line array is not always practical, optimal or affordable. Conversely, a point source solution may not be sufficient in coverage and SPL. TORUS is a constant curvature array, designed to fill that gap perfectly, combining tailored coverage, SPL and cost efficiency. We have three models in the series:

- T1215 offers a narrow vertical pattern of 15° with a flexible horizontal pattern that can be manually adjusted between 90°, 60° or 75° (Asymmetrical) via the Dynamic Horn Flare™.
- T1230 offers a vertical pattern of 30° with a flexible horizontal pattern that can be manually adjusted between 90°, 60° or 75° (Asymmetrical) via the Dynamic Horn Flare™.
- T820 offers a vertical pattern of 20° and a horizontal pattern of 100°. For further information on the T820, see the **TORUS T8 Rigging Manual**, available from our website.

Copyright © 2026 Martin Audio Ltd.

Important Safety Instructions

Please read these instructions and retrain for future reference. Heed all warnings and follow all instructions.

- No naked flame sources such as lighted candles should be placed on the apparatus. (1) (2)
- Do not block any ventilation openings. (1) (2)
- Install in accordance with the Martin Audio instructions. (1) (2)
- Do not install near any heat sources such as radiators, heat registers, stoves or other such apparatus that produce heat. (1) (2)
- Do not defeat the safety purpose of the grounding-type plug. A grounding plug has two blades and a third grounding prong. The third prong is provided for your safety. If the provided plug does not fit your outlet consult an electrician for replacement of the obsolete outlet. (1)
- Protect the power cable from being walked on or pinched particularly at plugs, convenience receptacles, and the point where they exit from the apparatus. (1)
- This equipment must be earthed. (1)
- Only use attachments / accessories specified by Martin Audio. (1) (2)
- Only use rigging hardware specified by Martin Audio. (2)
- Unplug this apparatus during lightning storms or when unused for long periods of time. (1) (2)
- No user serviceable parts inside, refer servicing to qualified service personnel. Servicing is required when the apparatus has been damaged in any way such as power supply cord or plug is damaged, liquid has been spilled or objects have fallen into the apparatus, the apparatus has been exposed to rain or moisture, does not operate normally, or has been dropped. (1)
- Do not remove covers
- Do not remove any protective earth or signal cable shield connections. (1)

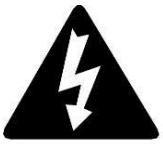

Notes

(1) Applies to Amplifiers and Controller used with TORUS 8

(2) Applies to TORUS 8

Unpacking the Units

After unpacking the unit, please check it carefully for any damage. If any is found, immediately notify the carrier concerned – you, the consignee, must instigate any claim. Please retain all packaging in case you need to return the unit.

Please consider the environment. When the product has reached the end of its useful life, please dispose of it responsibly through a recycling centre.

Copyright © 2026 Martin Audio Ltd.

System Overview

TORUS

This user guide describes two of the three TORUS models: the T1215 and T1230. For details of the T820, see the separate user guide available from our website martin-audio.com.

The T1215 and T1230 feature a single 12" (300mm) Neodymium magnet low frequency driver that is phase plug loaded for increased mid-band sensitivity. The high frequency element comprises three 1" exit (35mm), 1.4" (35mm) voice coil neodymium polymer dome compression drivers loaded with a manually adjustable Dynamic Horn Flare™ offering horizontal dispersion options of 60°, 90° or 75° Asymmetrical.

These two models differ only in their vertical dispersion. The T1215 has a 15° vertical dispersion, the T1230 has a 30° vertical dispersion.

TORUS is extremely versatile and is suitable for short to medium throw applications with comprehensive rigging offering solutions for a huge variety of coverage requirements to meet virtually any shape of venue.

Mechanical Design

TORUS enclosures are built from marine grade plywood finished in hard-wearing, water-resistant PU paint. Ergonomic handles make for ease of transportation and deployment.

The rigging allows for up to six cabinets to be flown in a horizontal or vertical configurations and arrays can comprise of both models to tailor the coverage to meet the requirements.

When flying TORUS vertically the HF horn can be positioned on the left or the right to create symmetrical system design.

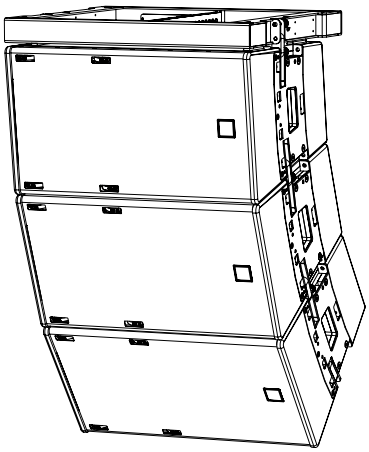

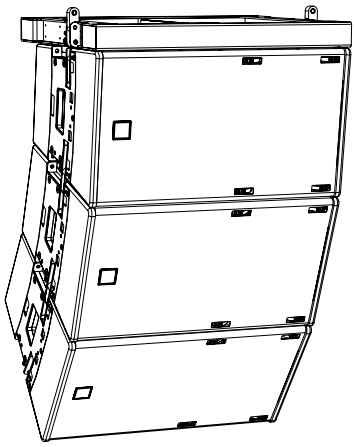

Copyright © 2026 Martin Audio Ltd.

In a horizontal array the HF horn can be positioned at the top or bottom of the array.

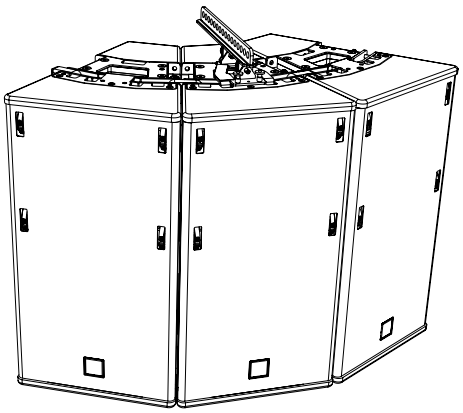

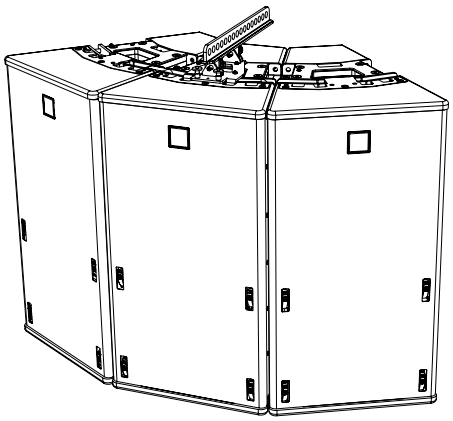

Acoustic Design

TORUS low frequency section consists of a 12” (300mm) neodymium driver in a ported reflex configuration to maximise low frequency extension. The driver is fitted with a phase plug in front of the cone to increase mid-band sensitivity to enhance projection in the vital vocal band of frequencies.

The HF section consists of 3 x 1” (25mm) exit, 1.4” (35mm) voice coil neodymium compression drivers mounted on a Dynamic Horn Flare™ with a flexible pattern control that can be manually adjusted between 90° (symmetrical), 60° (symmetrical) or 75° (asymmetrical). The system moves and locks the waveguide whilst also adjusting the horn mouth including the low diffraction termination into the baffle. This ensures that the horn geometry remains correct to produce the optimum settings for the dispersion you have selected.

You can adjust the horn at the front of the cabinet without needing to remove the grille.

Landscape Deployment

TORUS combined in landscape creates a vertical array. In this mode the combined fixed angle of the cabinets becomes the vertical dispersion, and the flexible dispersion can be adjusted in the horizontal.

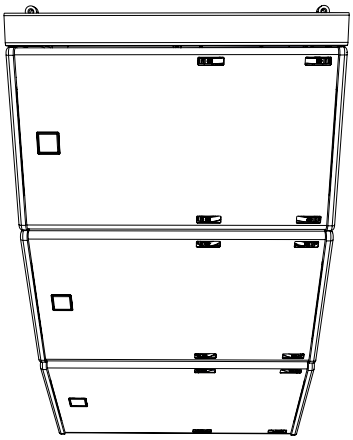

Copyright © 2026 Martin Audio Ltd.

Portrait Deployment

TORUS combined in portrait creates a horizontal array. In this mode the combined fixed angle of the cabinets becomes the horizontal dispersion, and the flexible dispersion can be adjusted in the vertical.

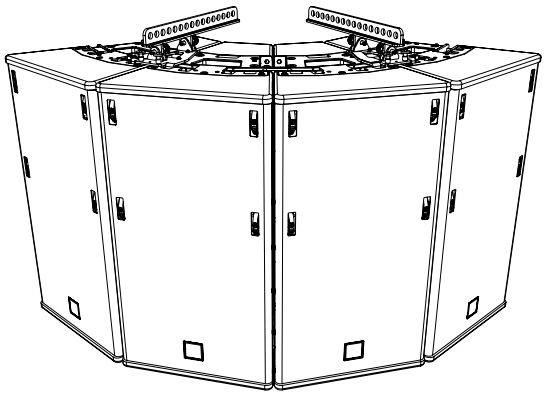

Changing Horn Dispersion

To adjust the angle, rotate the thumbwheels at the top and bottom of the grille. You can adjust each side in 15° increments to either 45° or 30°. If both sides are at their widest position, the total dispersion is 90°. By adjusting one side down from 45° to 30°, the dispersion will be 75° asymmetrical, with a bias to the left or right depending on which side of the horn you have adjusted. With both set to the minimum angle the dispersion reverts to a symmetrical 60°. Indicators on the thumbwheels show the horn angle.

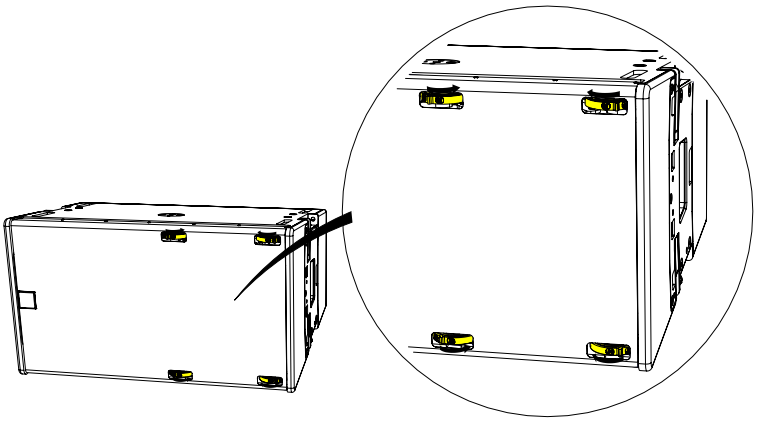

Copyright © 2026 Martin Audio Ltd.

Accessories

POLERIG1530

The POLERIG1530 allows a single cabinet (T1215 or T1230) to be mounted using a standard 35mm speaker stand or a 35mm distance bar when used in conjunction an SX Series Subwoofer fitted with a pole mount insert.

The POLRIG1530 can be fitted to the top or the bottom of the cabinet allowing systems to be mirrored with the high frequency horn either to the left or the right.

SBAR40

The SBAR40 allows a single cabinet to be flown in landscape. Five holes give various angle options for up and down tilt. An adaptor is included for truss mounting.

The SBAR40 can be fitted to the top or the bottom of the cabinet allowing stereo systems to be mirrored, with the high frequency horn either to the left or the right.

T12GRID

The T12GRID allows you to vertically array up to six TORUS T12 cabinets. You can fly cabinets inverted using the T12GRID. This allows you to mirror stereo arrays, with the high frequency horn either to the left or the right.

HRIG100

The HRIG100 allows you to horizontally array up to six TORUS T8 or T12 cabinets. For up to three cabinets, you only need one HRIG100. For four, five or six cabinets, you need two HRIG100. Note that HRIG100 was previously product code T12HRIG.

Copyright © 2026 Martin Audio Ltd.

T12TRIG

The T12TRIG is a transition grid between vertically arrayed TORUS T12 (in landscape) and SXCF118 subwoofers.

T12PB

The T12PB allows you to fly up to six TORUS T12 cabinets in a vertical array without any array angle limit. When used with a T12GRID, you can use the T12PB as a pullback/array stabilizing accessory.

GSRIG1530

The GSRIG1530 allows for safe deployment of up to three TORUS T12 cabinets mechanically ground-stacked to any SX subwoofer that has an M20 pole mount.

SCS250

The SCS250 is a heavy duty clamp allowing you to mount TORUS grids and brackets to truss or scaffold tube (48–51 mm diameter). The quick release rigging pin and fork connects directly to SBAR40, HRIG100 and T12GRID. The swivel joint allows free pan angle adjustment, then clamps securely in position. Due to the Working Load Limit (WLL) of 250 kg (551 lb) the TORUS array size limits are the same whether you fly TORUS from SCS250 or chains.

Copyright © 2026 Martin Audio Ltd.

Recommended Subwoofer

SXCF118

Whilst a TORUS T12 array can be complimented with any of the SX Series subwoofers, the SXCF118 is an idea choice for vertical TORUS T12 arrays where a flown subwoofer is required in a combined array. You can fly TORUS T12 directly under an array of SXCF118 subwoofers by using the T12TRIG.

The SXCF118 is a compact, high performance cardioid subwoofer, combining maximum low frequency output with pattern control. It features an 18” (460mm) forward facing driver and a 14” (356mm) rear facing driver, each driven independently by separate amplifier channels and DSP. Each driver has its own chamber with optimised bass reflex porting. This arrangement produces a cardioid dispersion pattern which maximises the front radiation and reduces unwanted radiation behind the subwoofer.

The enclosure is constructed from multi-laminate plywood and coated with hard-wearing textured black polyurea. Rigid perforated steel grilles protect the front and rear of the enclosure, while interlocking skids protect the top and bottom and prevent movement when stacked. An M20 threaded insert allows for pole mounting of TORUS systems.

Copyright © 2026 Martin Audio Ltd.

Amplification

iKON Amplifiers

For the best possible performance T1215 and T1230 are powered and controlled using iKON amplifiers. Factory presets are loaded via Martin Audio's VU-NET control software, which is also used for system remote control and monitoring via Ethernet. A front panel interface allows full local control of all features.

Dante digital audio network inputs are also provided for digital audio distribution and control. Powerful DSP is integrated to ensure maximum performance and compatibility. iKON amplifiers provide comprehensive protection functions to maintain safe operating conditions of both the amplifier and the loudspeakers driven — including a sophisticated loudspeaker limiter suite which incorporates peak, RMS and excursion limiting, as well as multiband limiting for passive 2-way systems.

Copyright © 2026 Martin Audio Ltd.

DISPLAY 3

Overview

DISPLAY 3 is modelling software that predicts coverage and SPL for Martin Audio loudspeakers in a 3D environment.

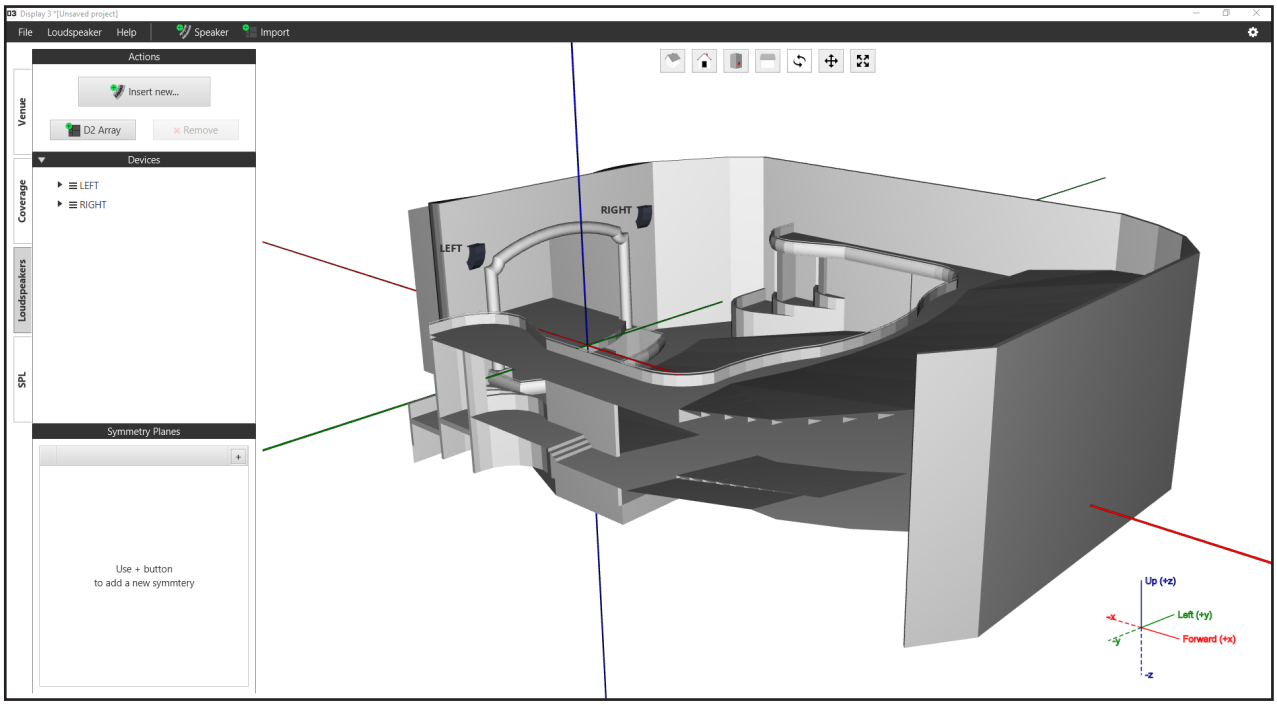

To create your venue in DISPLAY 3, you can import from Sketchup or draw a simple model using the DISPLAY 3 Native tool.

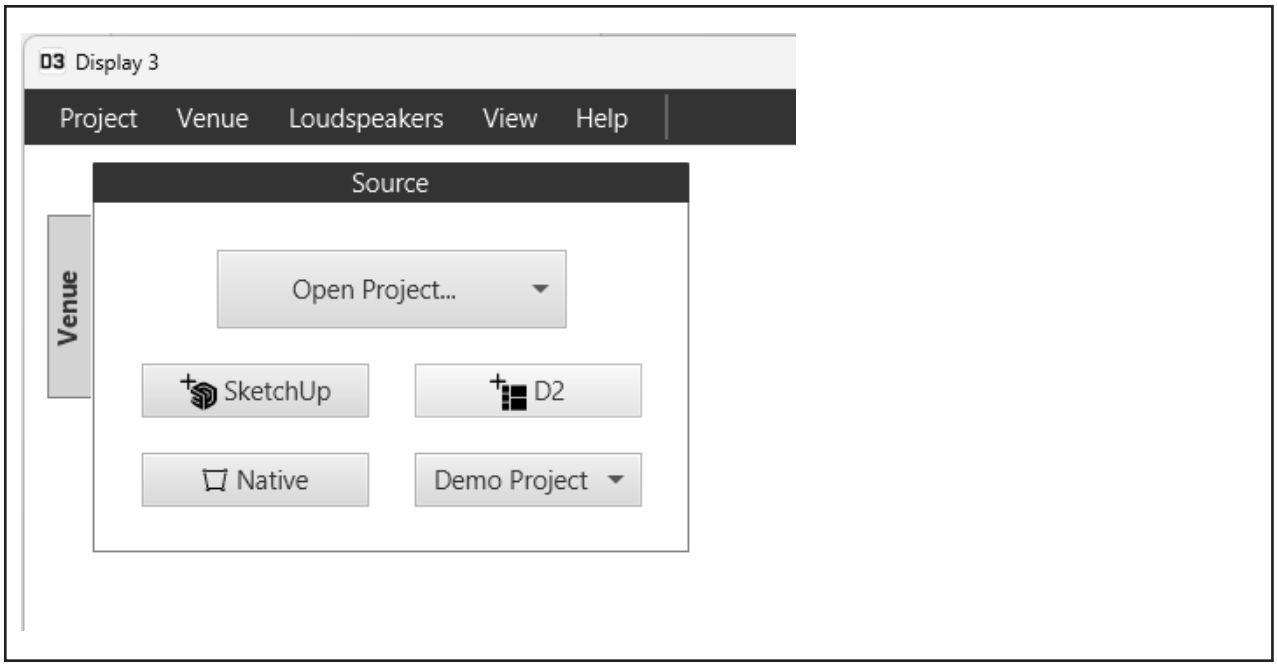

Copyright © 2026 Martin Audio Ltd.

DISPLAY 3 can use tags or layers inherited from Sketchup.

You can use layers to define coverage parameters: audience, non-audience or hard avoid. These surface types define the offset with which SPL is mapped.

The auto-assign button in the coverage tool automates this process.

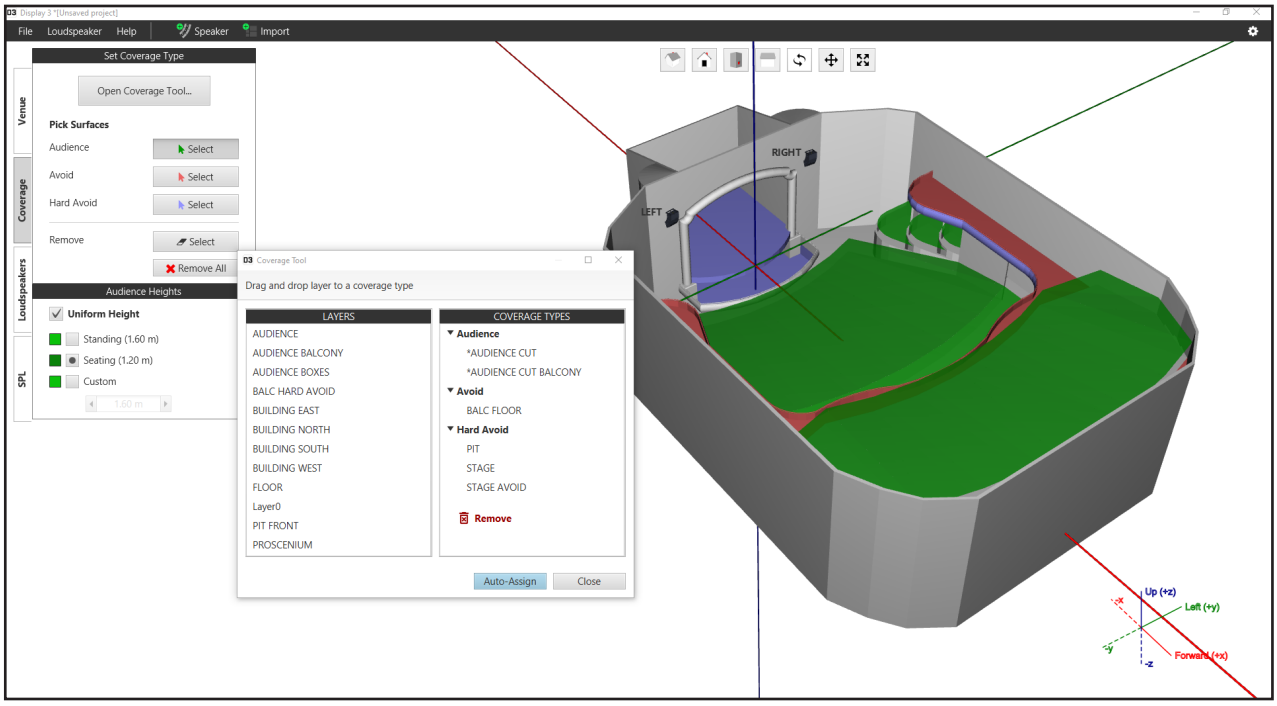

To add loudspeakers to your model, select from the DISPLAY 3 library of Martin Audio speakers.

For TORUS constant curvature systems, select whether to deploy horizontally or vertically and choose the cabinet type, quantity and horn angle.

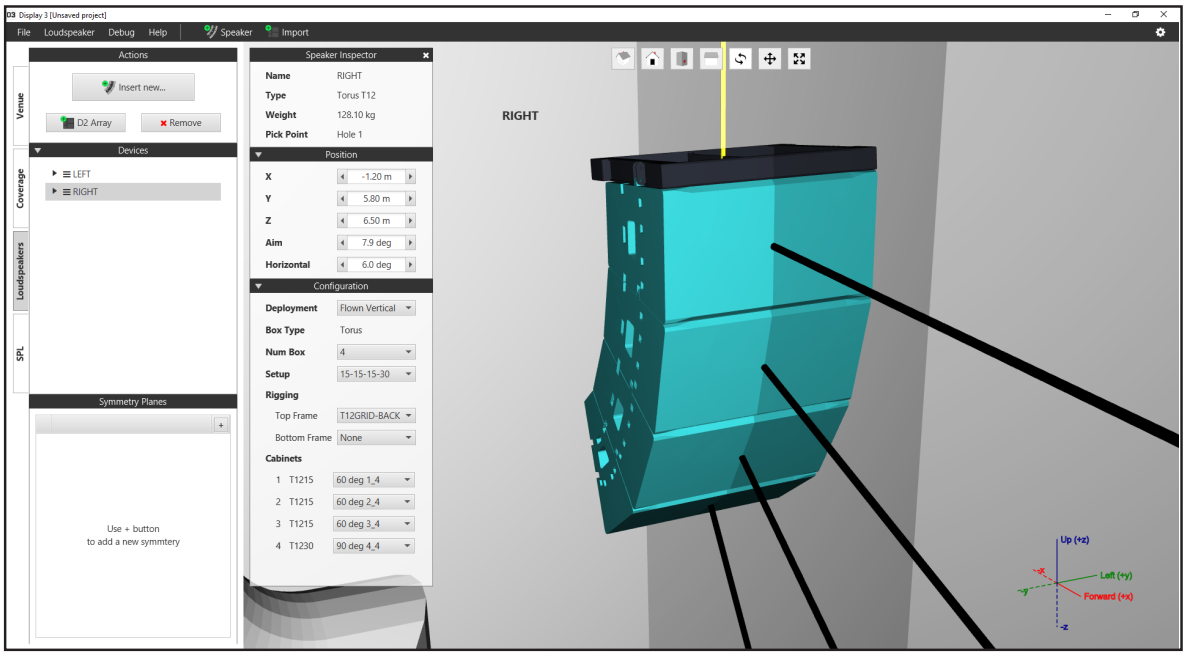

Copyright © 2026 Martin Audio Ltd.

DISPLAY 3 for TORUS allows you to adjust the high frequency output using the FIR high shelf for each circuit. You can use this to adjust the high frequency level (per circuit) giving you more consistent SPL over the coverage area.

The image on the left below shows the coverage and SPL mapping without FIR HF shading. The image on the right has FIR HF shading giving more balanced SPL over the target area.

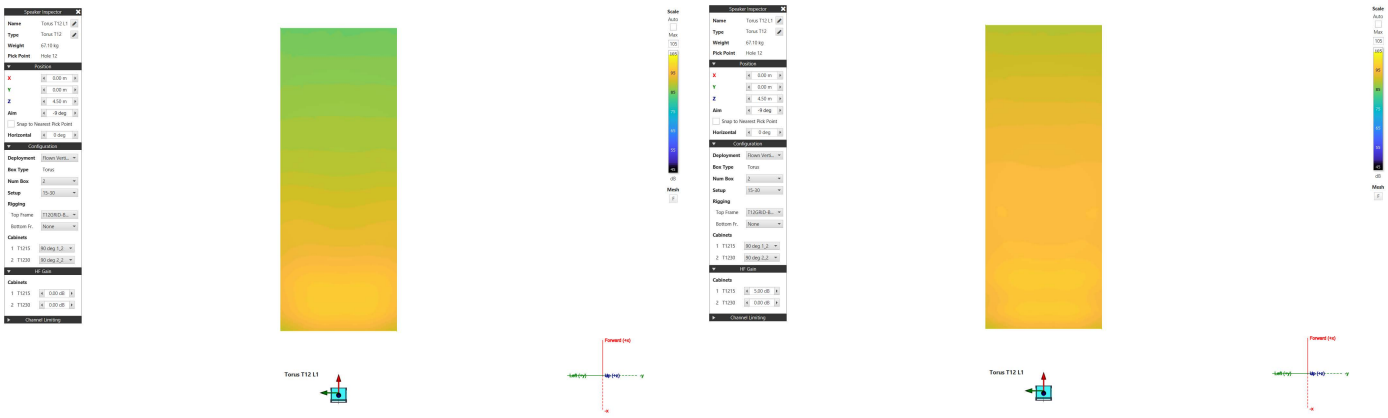

The SPL mapping shows the predicted output of the system with the selected input signal and gain structure.

Selecting the MAX button automatically sets the input level to the limit of the entire system. The resultant SPL map will be that of the system as the first loudspeaker goes into limit.

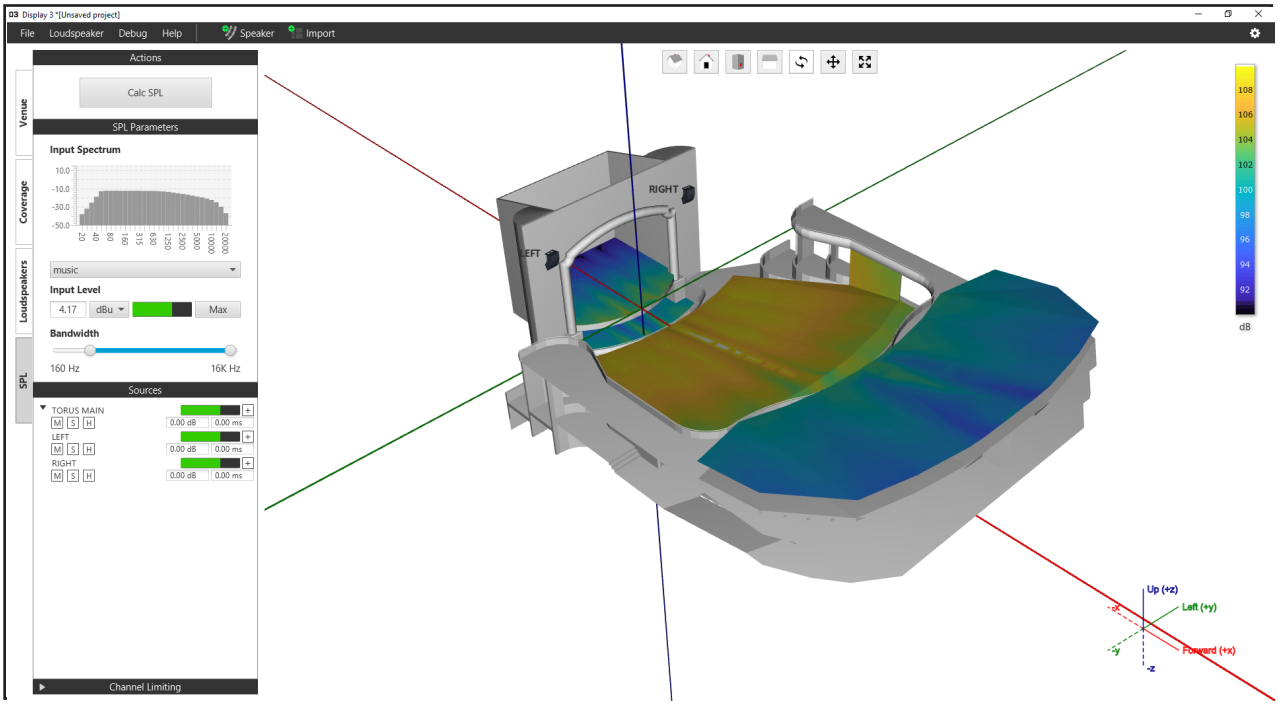

Display 3 is part of a developing roadmap of software releases whereby tools and features are incrementally released over time. Display 3 is available as a free download from the Martin Audio website; https://martin-audio.com/support/software

Copyright © 2026 Martin Audio Ltd.

VU-NET 2

Overview

Vu-Net is control software for Martin Audio products including iKON and TORUS. Load factory presets, monitor system performance in real-time and control gain, EQ routing and delay via a networked infrastructure.

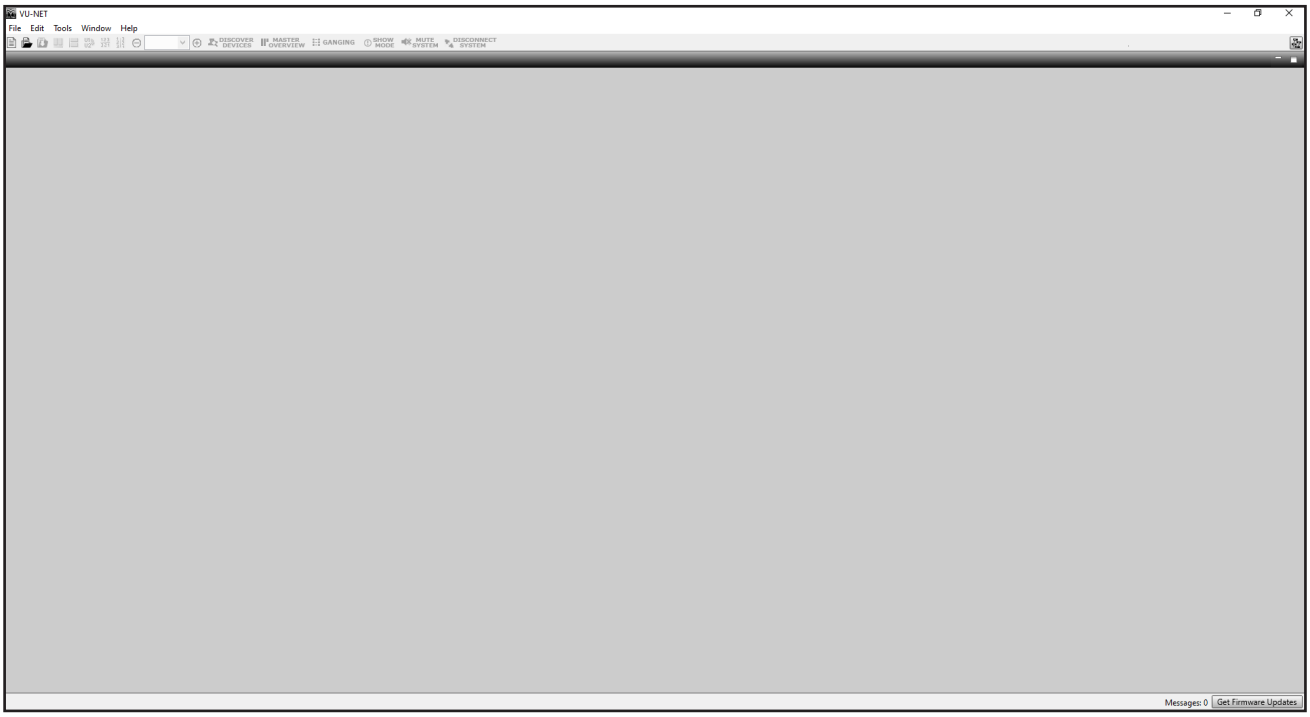

Devices can be added manually using the Palette on the left, but this has limited use. In practical applications, the Discover Devices button is used.

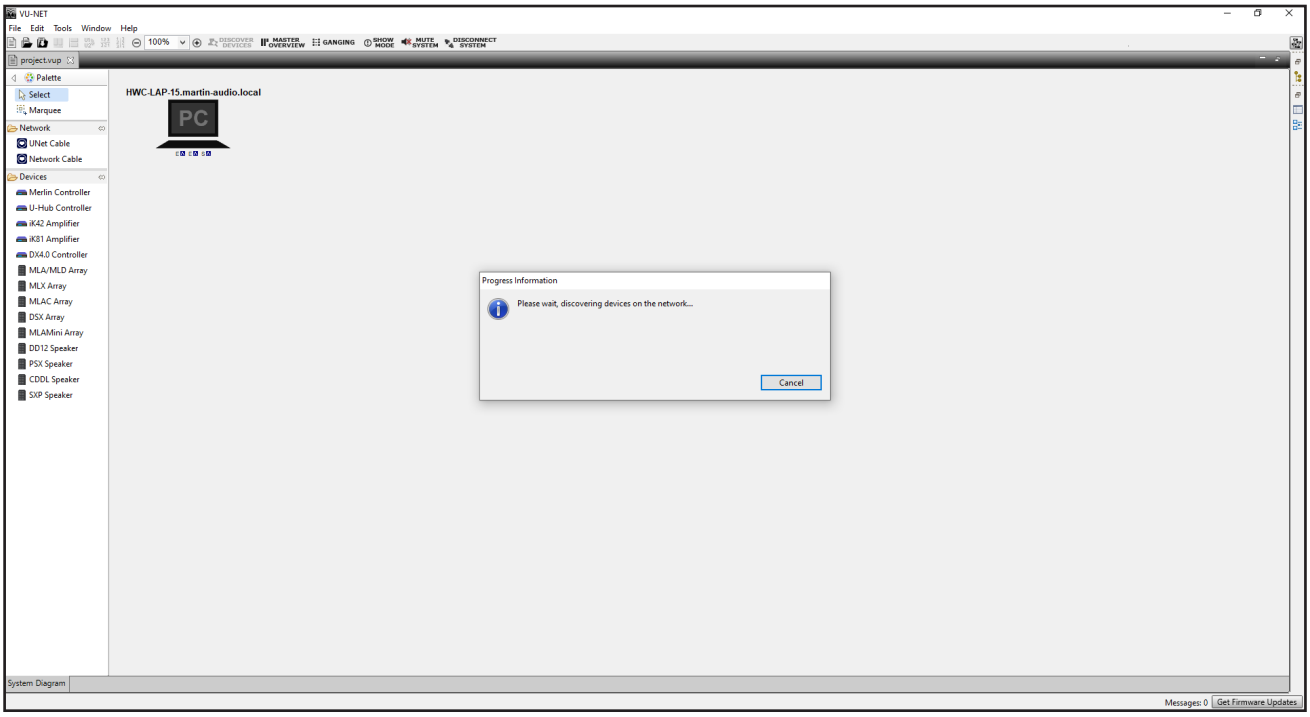

Copyright © 2026 Martin Audio Ltd.

The application searches the network for all Vu-Net enabled devices and will add them to the project upon discovery.

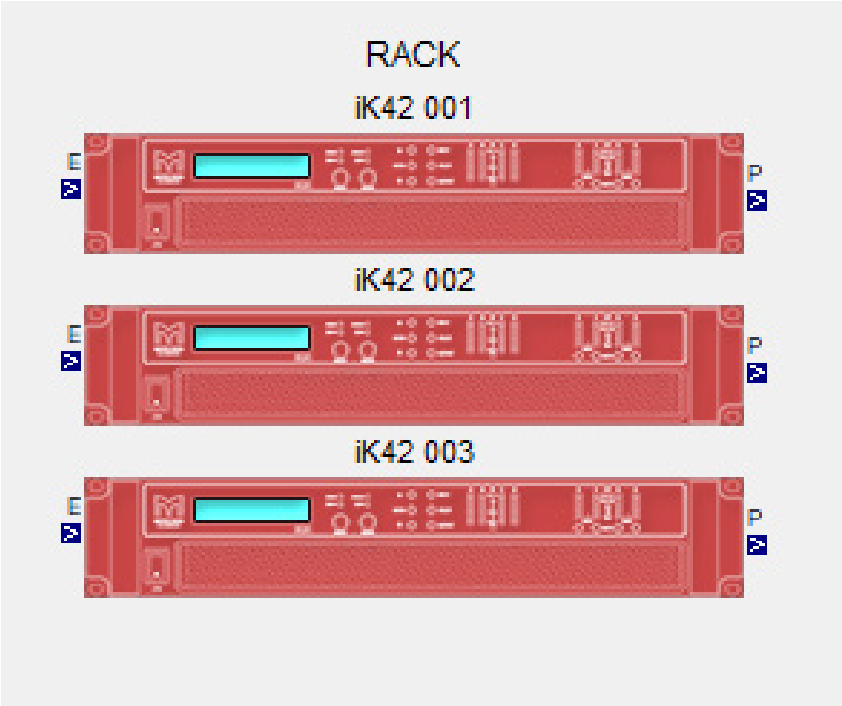

Presets are added to the amplifiers using the preset manager. Right click an amplifier to access the preset manager.

Copyright © 2026 Martin Audio Ltd.

When loading a TORUS T12 preset, first select the deployment type, followed by the number of speakers and amplifier channels used to drive the array.

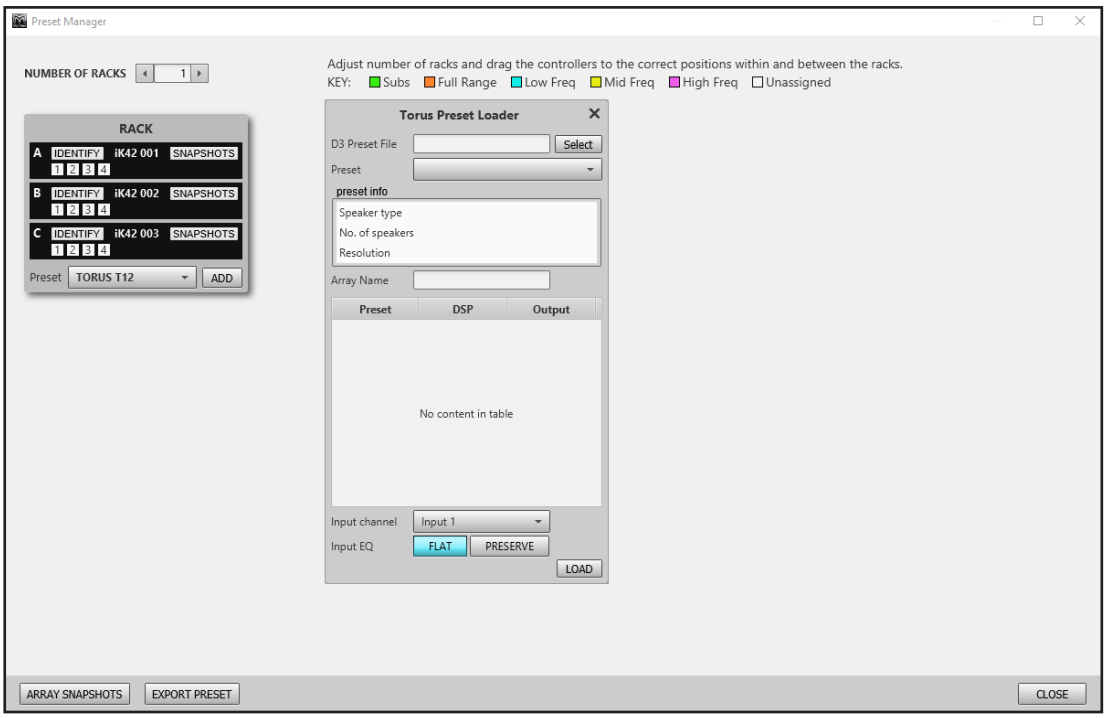

The preset info box displays a coloured graphic of the T12 array showing how it should be wired. For vertical systems, the array is wired from top to bottom and for horizontal systems, it is wired from the centre out.

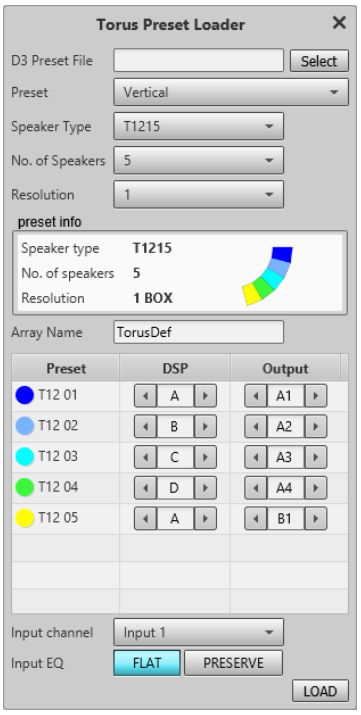

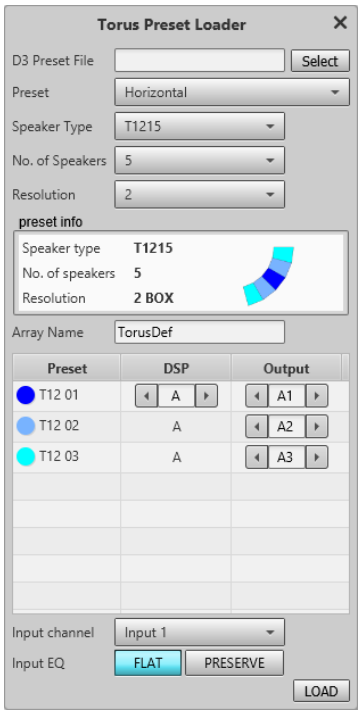

Copyright © 2026 Martin Audio Ltd.

The table is used to select the DSP and output channel used per circuit. For vertical T12 arrays, independent DSP channels can be assigned to each circuit.

An FIR Hi-Shelf is available on the DSP EQ to control the balance of the array.

For horizontal arrays, only one DSP channel is required.

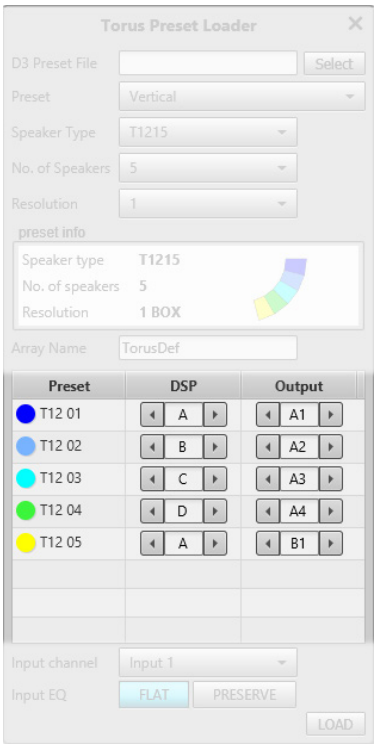

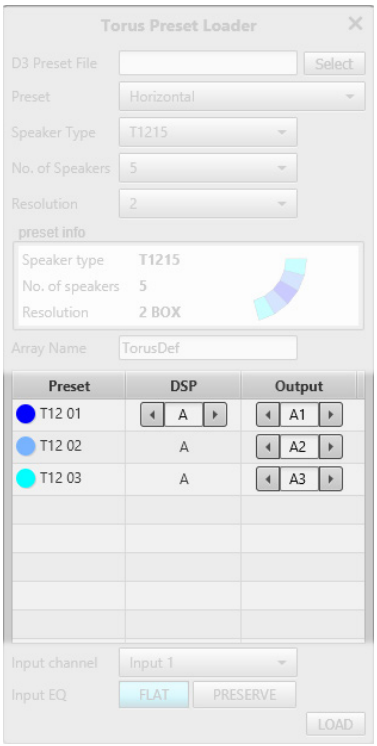

TORUS cabinets have an LED for identification, this can be toggled from within the amplifier's control panel. The output channel is muted to prevent audio from passing to the circuit when the LED is active.

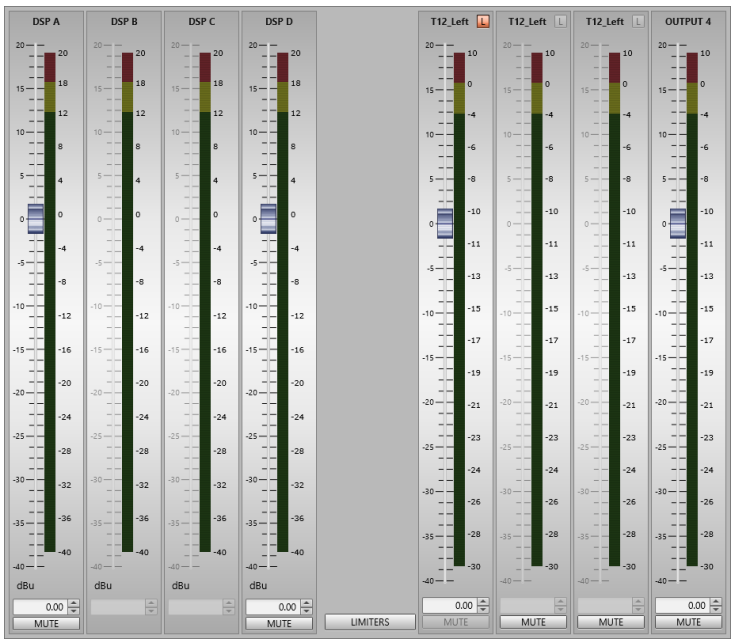

Copyright © 2026 Martin Audio Ltd.

Input EQ can be adjusted to suit your preferences and to compensate for any difficult acoustics.

PEQs and the Lo-Shelf are ganged across all used DSP channels in the array, whereas the FIR Hi-shelf is independent for each DSP channel.

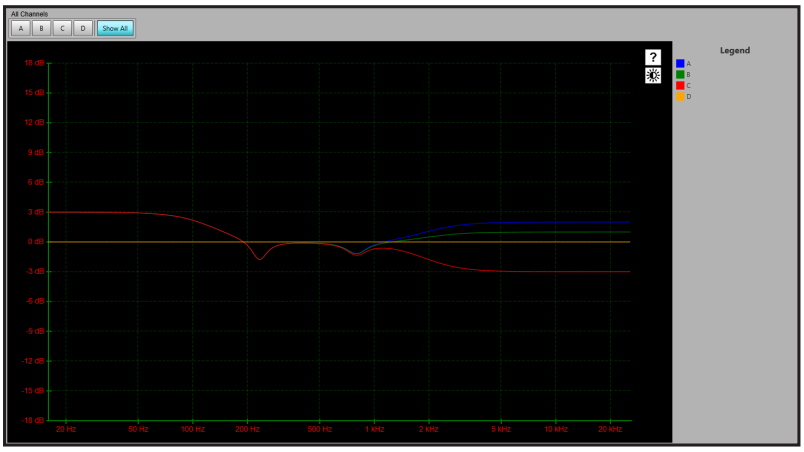

The high-pass filter is available on the Output EQ section for use with a subwoofer.

Vu-Net can be downloaded from the Martin Audio website; https://martin-audio.com/support/software

Copyright © 2026 Martin Audio Ltd.

Connections

Overview

T12 cabinets have two parallel-wired Neutrik® NL4 connectors recessed at the rear of the cabinet.

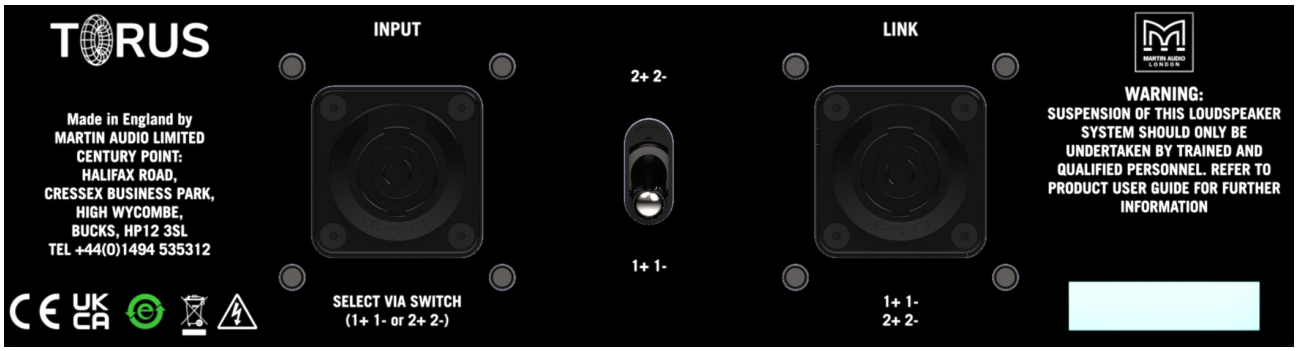

The two NL4s are wired in parallel so either can be used as a nominal ‘input’ or ‘link’ output.

TORUS features a “bi-wire” input configuration that uses both channels of the NL4 connection offering the option of receiving the signal from either pins +/-1 or +/-2. This allows for simplified wiring using a single 4-core speaker cable. For example, if you are running a six cabinet array powered by two channels of an IKON amplifier, both channels can be routed via a 4-core speaker cable to the first TORUS cabinet. All other cabinets are linked with short NL4 cables running from the LINK OUT on one cabinet to the INPUT on the next. The first three cabinets are switched to receive their feed from pins 1+/-, the remaining three cabinets are switched to pins 2+/-. The first three cabinets are now powered by channel 1 on the amplifier, the other three from channel 2. As all TORUS cabinets have an impedance of 8 ohm, with three cabinets in parallel on each channel they will both see an impedance of approximately 3.6 ohm.

Copyright © 2026 Martin Audio Ltd.

Rigging

Overview

TORUS cabinets have a single-point rigging system located on either side of the cabinet. All hardware is captive and can be stored conveniently for transportation.

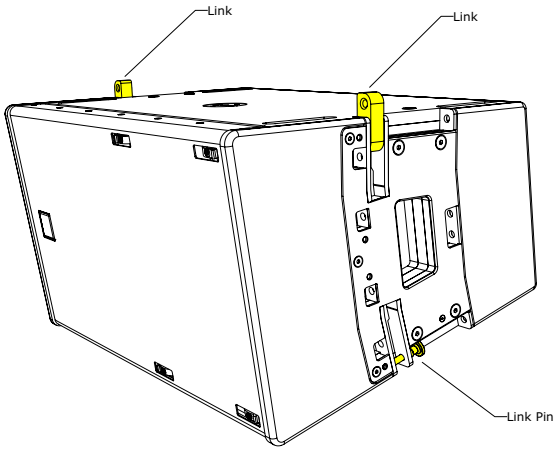

The fixed angled enclosure can be arrayed vertically and horizontally and deployed in various configurations with additional hardware.

Copyright © 2026 Martin Audio Ltd.

T12GRID

When flying TORUS vertically in landscape the HF horn can be positioned on the left or the right to create symmetrical system design.

Linking up – HF horn to the right

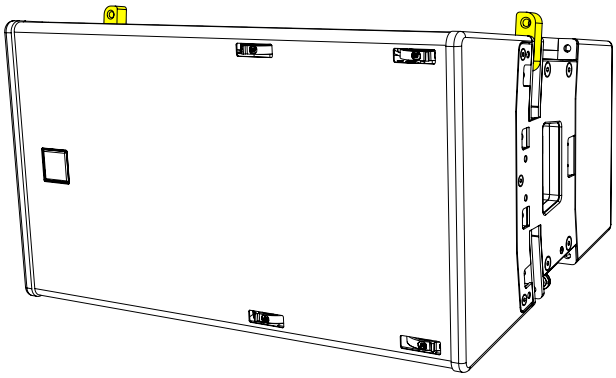

Linking down – HF horn to the left

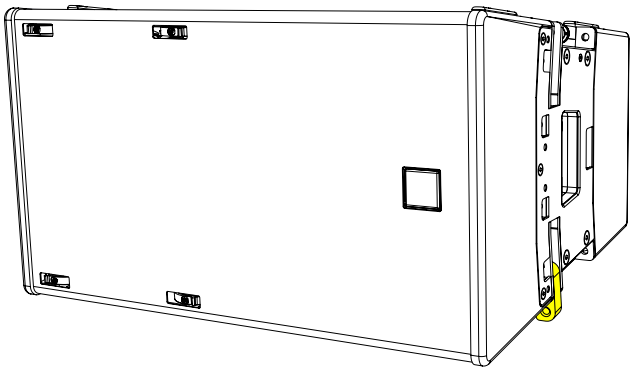

HF Right

Remove rigging pin and rotate the link through 180 degrees

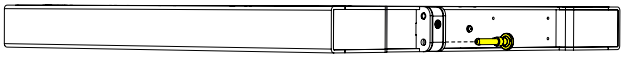

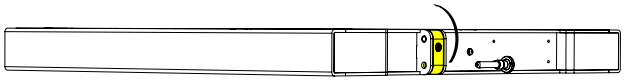

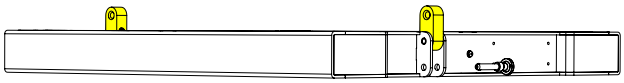

Copyright © 2026 Martin Audio Ltd.

Position the T12GRID on top of the TORUS cabinet, rotate the links and insert the rigging pins. Make sure the cabinet is secured on both sides before lifting

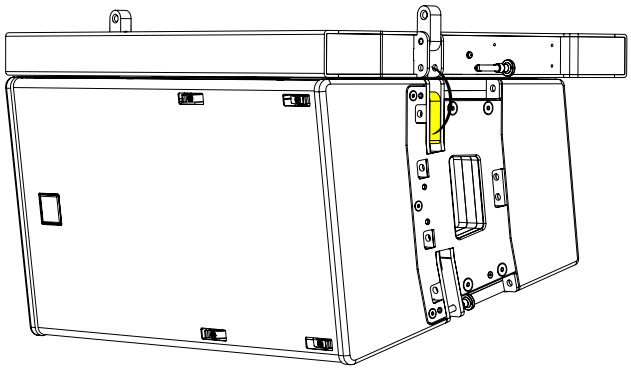

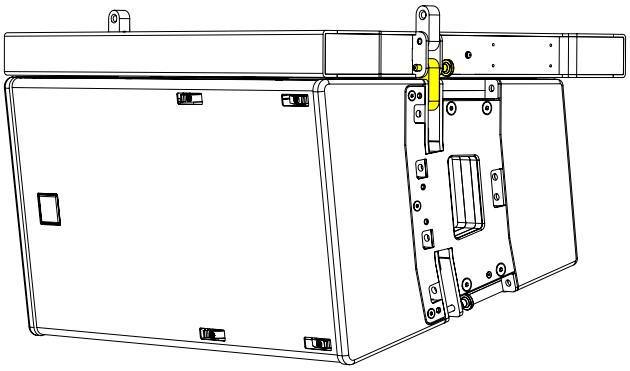

Lift the array to a height where the next cabinet can be positioned underneath. Either lift the cabinet into position or lower the T12GRID onto the cabinet below.

Remove the rigging pins from the cabinet above, rotate the links on the cabinet below and insert the rigging pins to secure.

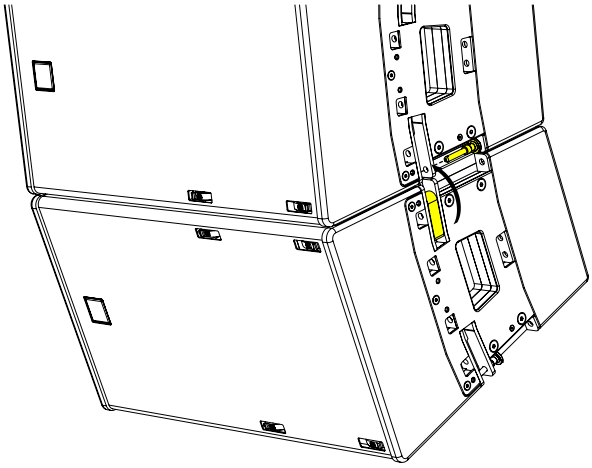

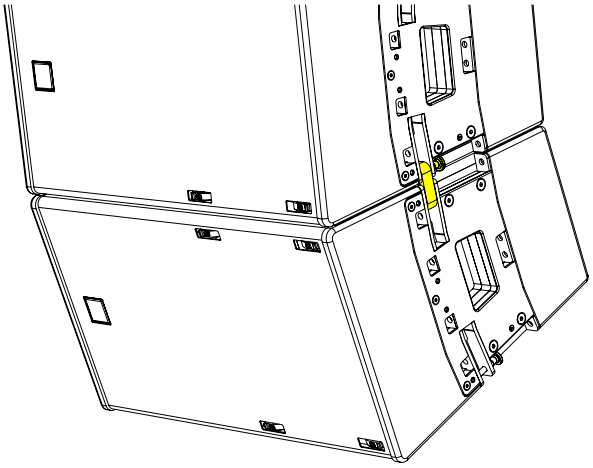

Repeat the process until the desired amount of TORUS have been vertically arrayed.

A maximum of six cabinets can be flown from the T12GRID. To mount T12GRID to truss, use the SCS250 (see page 10).

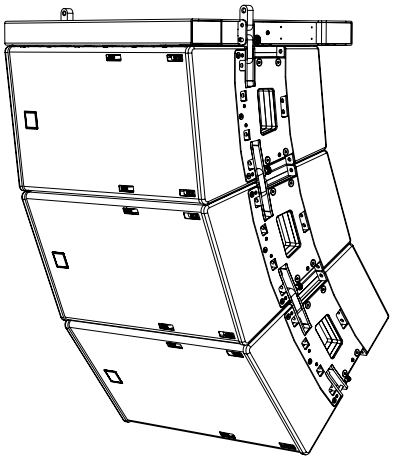

Copyright © 2026 Martin Audio Ltd.

HF Left

Remove rigging pin and rotate the link through 180 degrees.

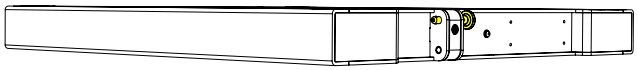

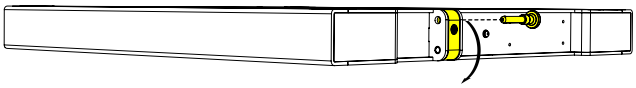

Position the T12GRID on top of the TORUS cabinet, rotate the links on the and insert the rigging pins. Make sure the cabinet is secured on both sides before lifting

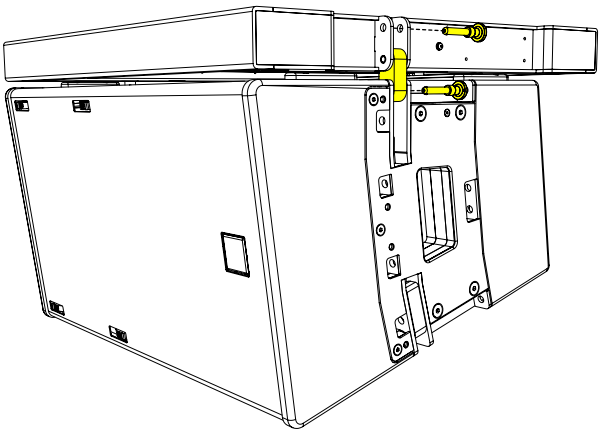

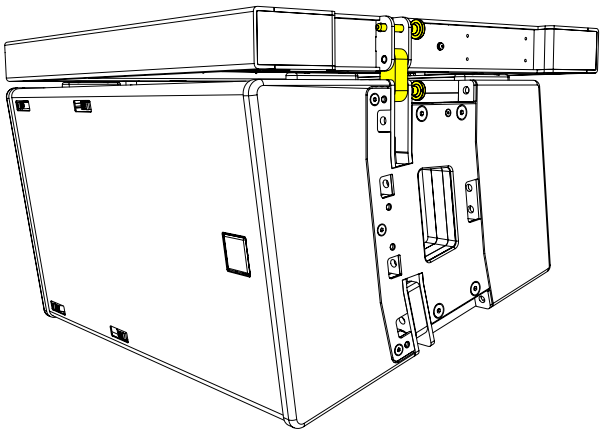

Remove the rigging pins from the cabinet below, rotate the links on the cabinet above and insert the rigging pins to secure

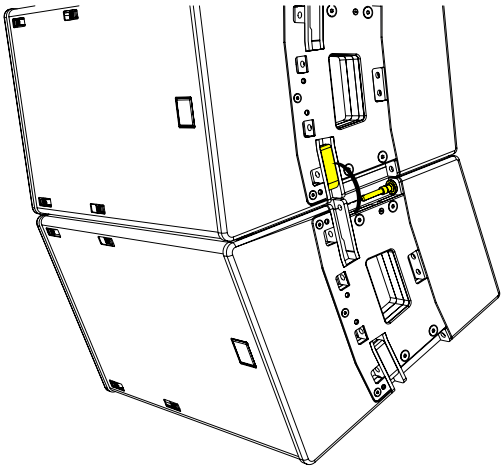

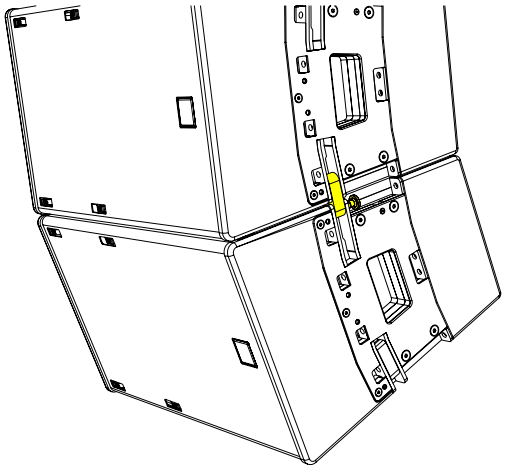

Copyright © 2026 Martin Audio Ltd.

Repeat the process until the desired number of TORUS have been vertically arrayed.

A maximum of six cabinets can be flown from the T12GRID. To mount T12GRID on truss, use the SCS250 (see page 10).

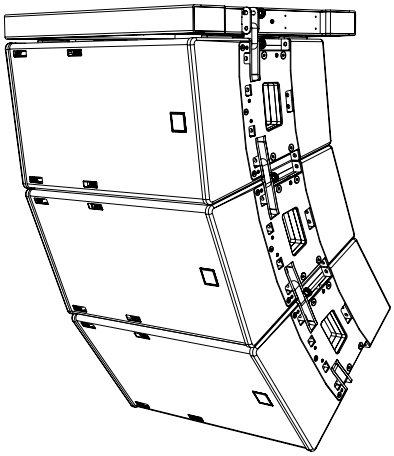

T12GRID Front and Back Positioning

T12GRID can be positioned towards the rear of the array to maximise the available down tilt for a single point hang

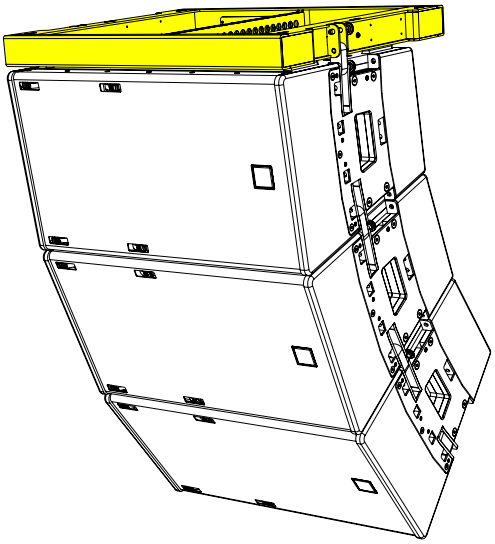

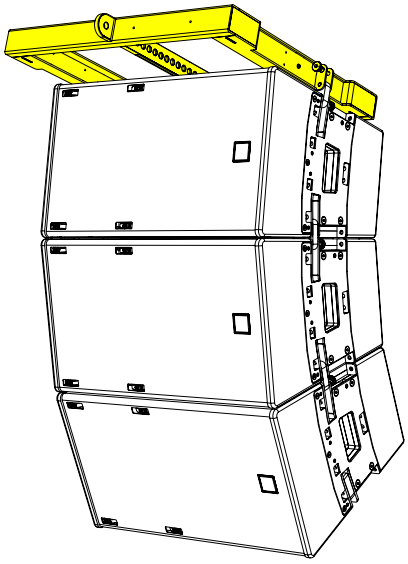

Copyright © 2026 Martin Audio Ltd.

A second T12GRID can be linked to the bottom of the array and used to achieve site angles that are not possible with a single T12GRID. The configuration can also be used to secure the array to stop it moving.

Invert the T12GRID, remove the rigging pins and rotate the T12GRID links. Replace the pins to secure the grid to the array.

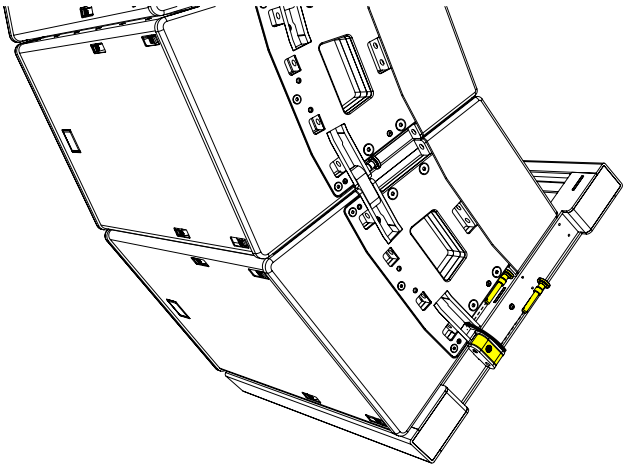

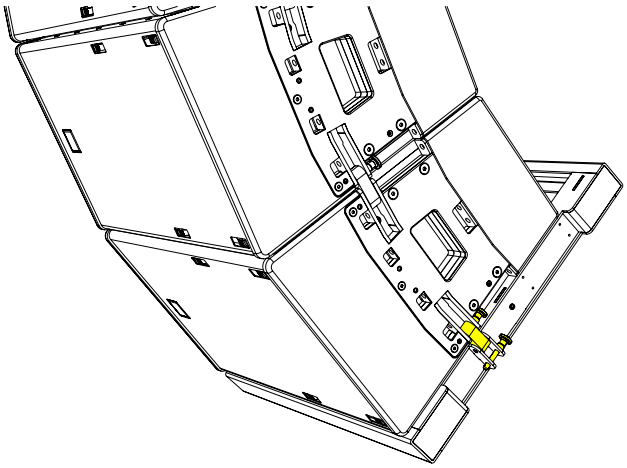

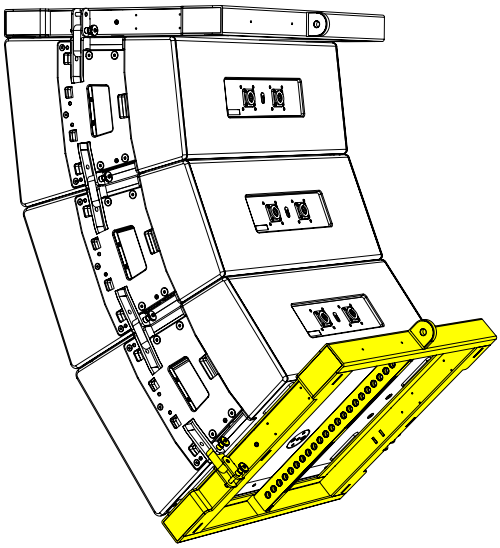

Copyright © 2026 Martin Audio Ltd.

A T12PB can be linked to the bottom of the array and used to achieve site angles that are not possible with a single T12GRID. The configuration can also be used to secure the array to stop it moving.

Remove the rigging pins and rotate the T12PB links. Replace the pins to secure the T12PB to the cabinet.

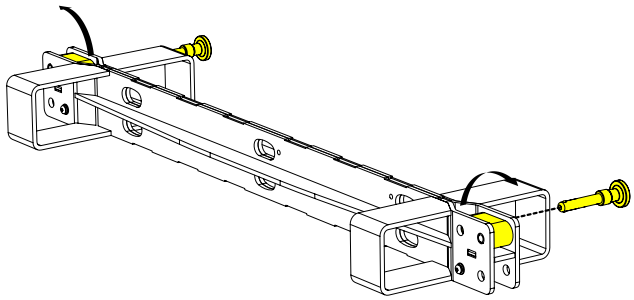

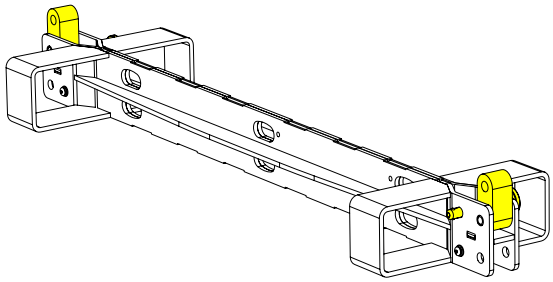

Secure the T12PB to the bottom of the array using the rigging pins from the bottom cabinet

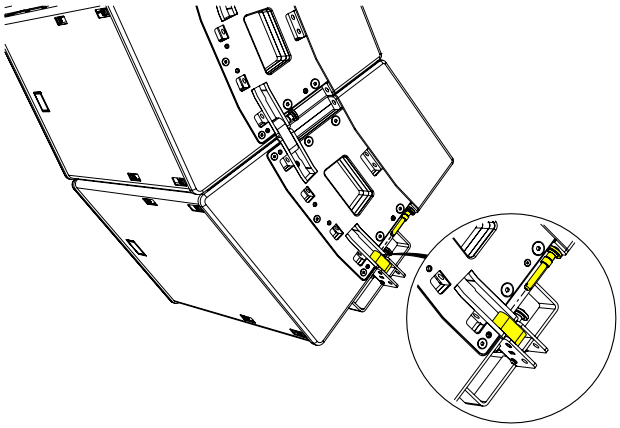

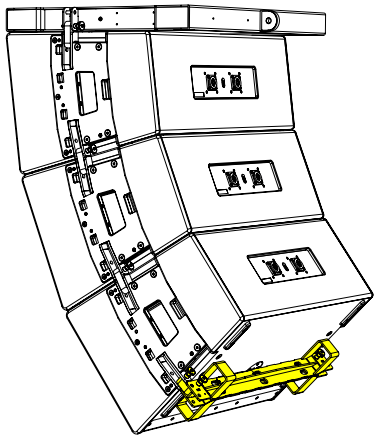

Copyright © 2026 Martin Audio Ltd.

HRIG100

The HRIG100 rigging accessory allows you to suspend a horizontal array of TORUS T8 or T12 cabinets (in portrait). To mount HRIG100 to truss or scaffold poles, use an SCS250 (see page 10).

With the cabinet in portrait, you can mount the HRIG100 on the top or the bottom. This allows you to position the HF horn at the top or the bottom of the array. You can mount the HRIG100 on one cabinet or across two cabinets.

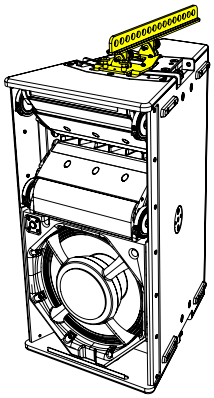

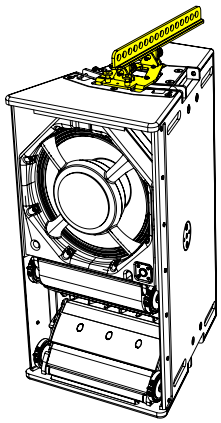

If you are using more than one cabinet, rotate the link before mounting the HRIG100.

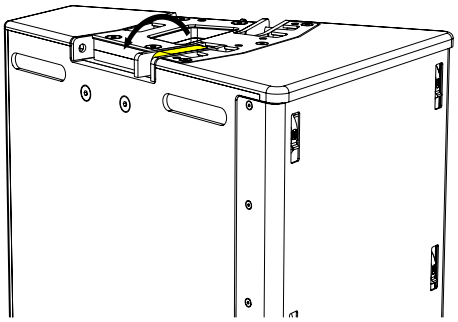

As mentioned above, you can mount the HRIG100 on one cabinet or across two cabinets.

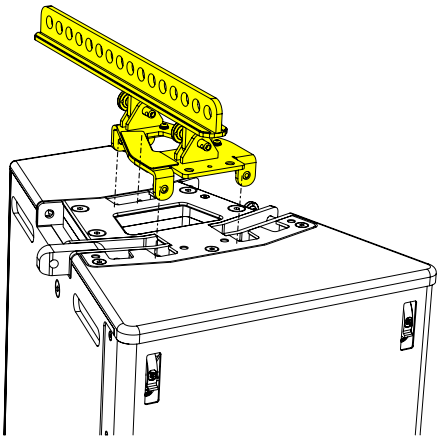

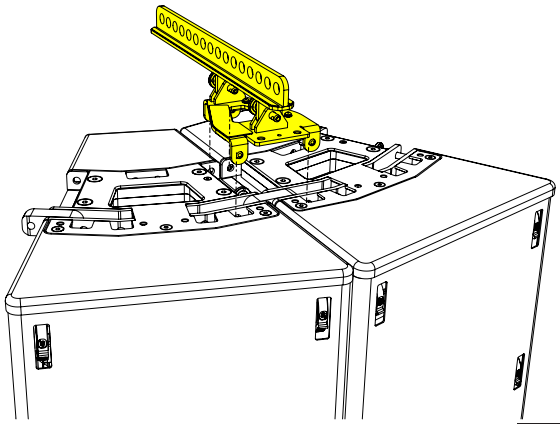

Copyright © 2026 Martin Audio Ltd.

When you attach the HRIG100, make sure all four pins (two back and two front) locate and lock into position.

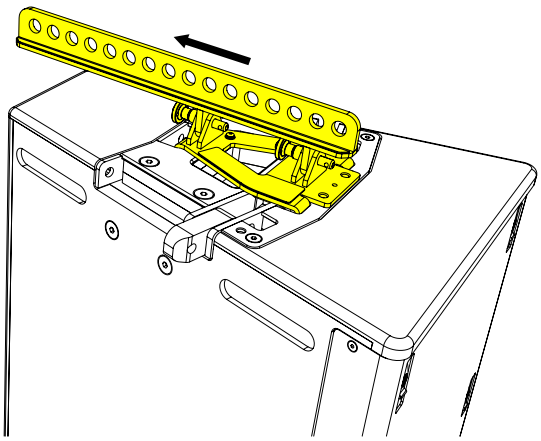

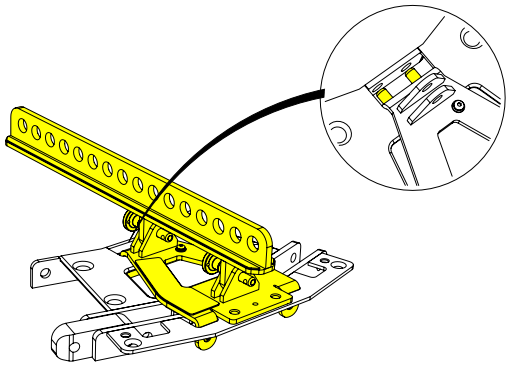

The HRIG100 is only secure when the two locking pins have been inserted and locked into place.

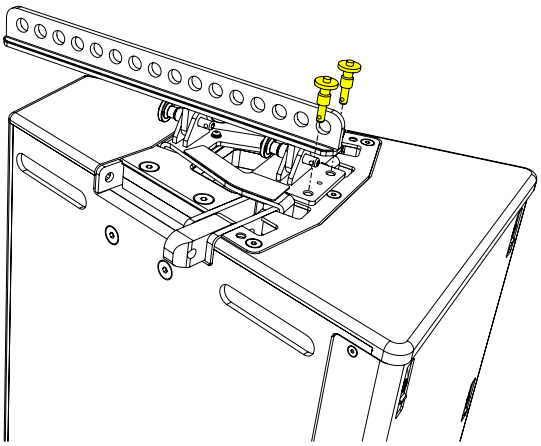

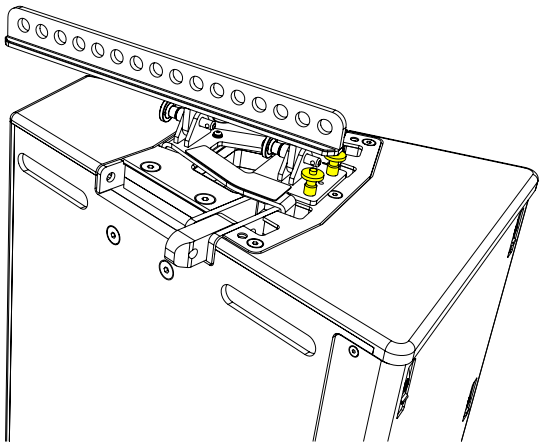

Add more TORUS by aligning the skids to the adjacent cabinet.

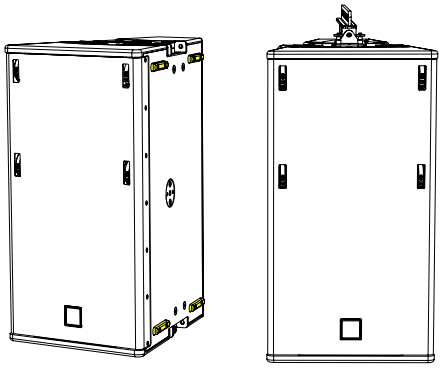

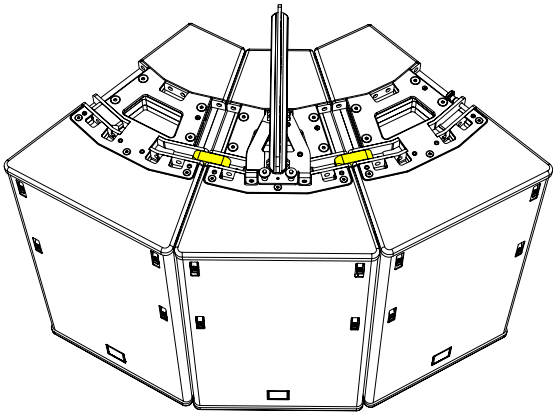

Copyright © 2026 Martin Audio Ltd.

Replace pins and lock the top of the cabinets together.

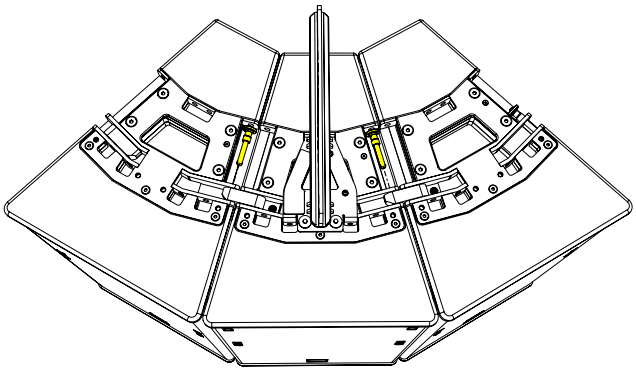

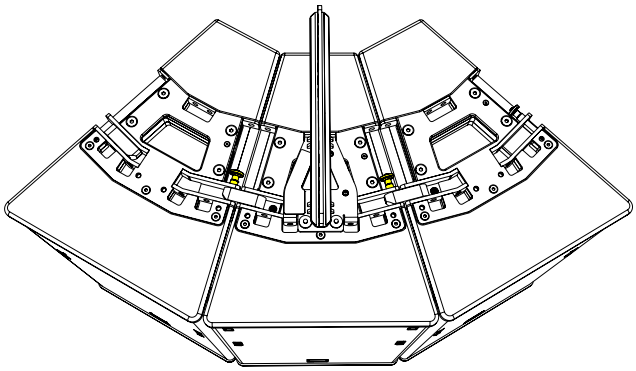

Lift the array and remove the rigging pins on the bottom of the array. Rotate the links into position.

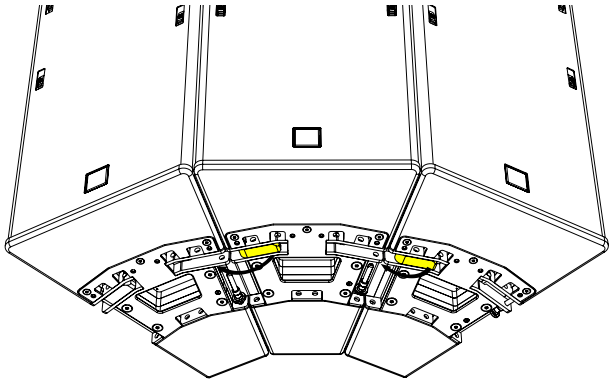

Replace the pins to link the bottom of the cabinets together.

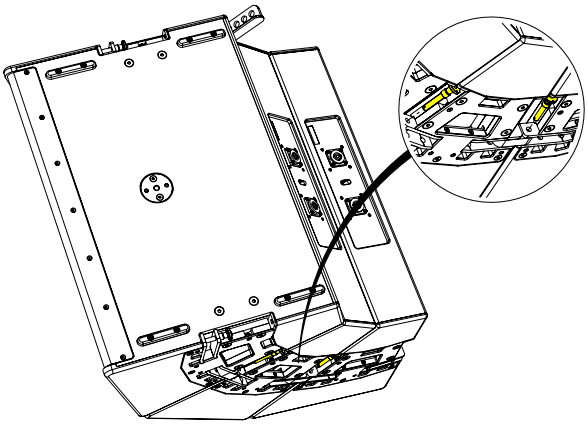

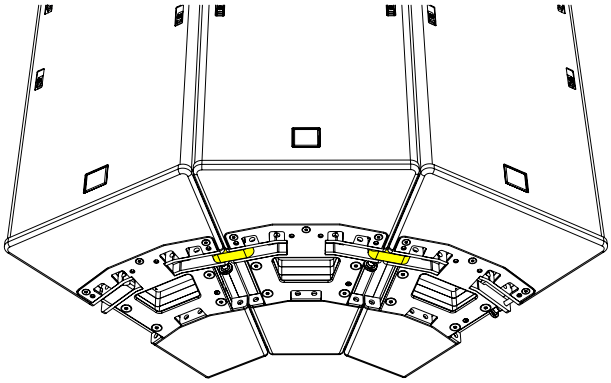

Copyright © 2026 Martin Audio Ltd.

Up to six cabinets can be suspended using one of two HRIG100's. Below shows the number and arrangement of HRIG100's for each possible array combination.

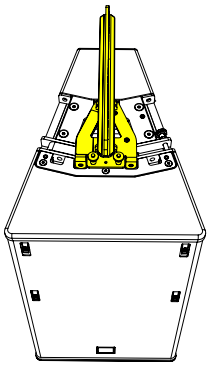

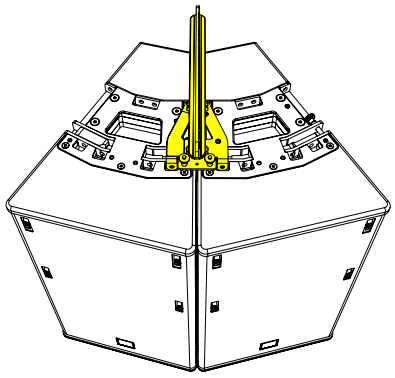

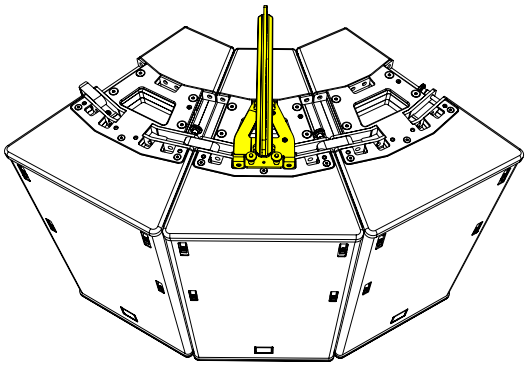

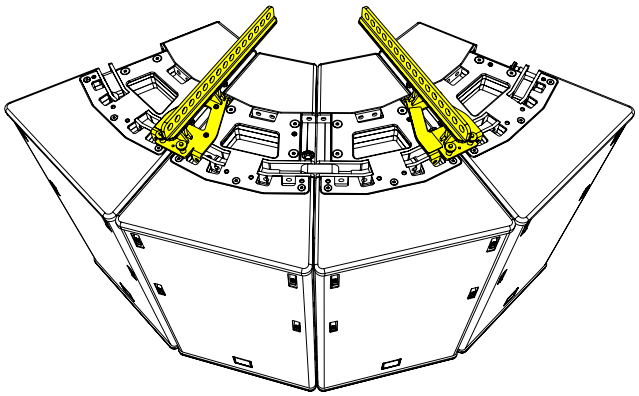

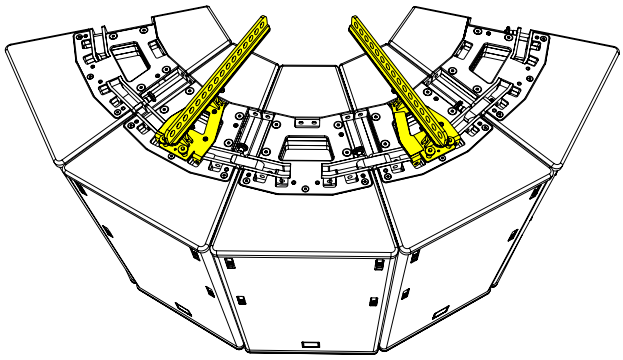

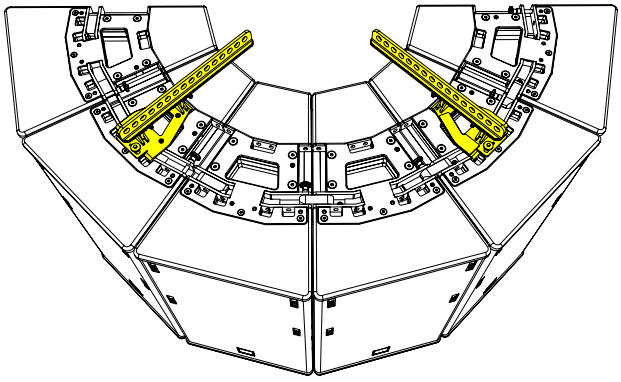

Copyright © 2026 Martin Audio Ltd.

T12TRIG

The T12TRIG is a conversion frame for TORUS T12 cabinets flown beneath SXCF118.

Using one or two motors, position a WPSGRIDt above the SXCF118 and lower it onto the enclosure.

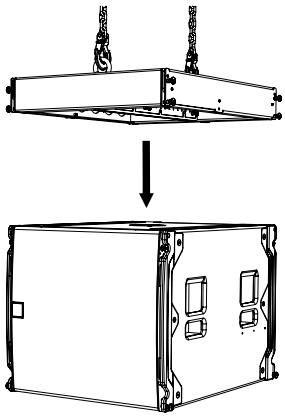

Remove the pins from the from SXCF118 to release the links. Rotate the SXCF118 links and line them up with the pin holes in the WPSGRIDt.

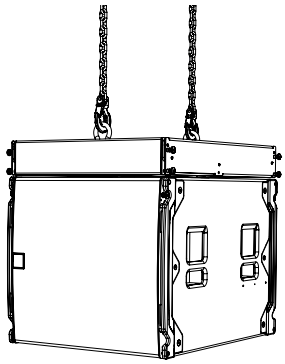

Replace the pins to link and lock the SXCF118 securely to the WPSGRIDt.

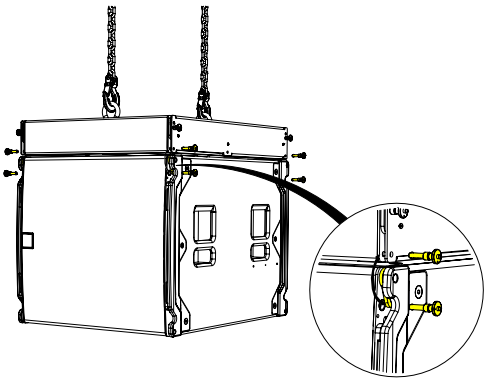

Copyright © 2026 Martin Audio Ltd.

Raise the sub array and place the T12TRIG underneath. Lower the array making sure the T12TRIG is aligned.

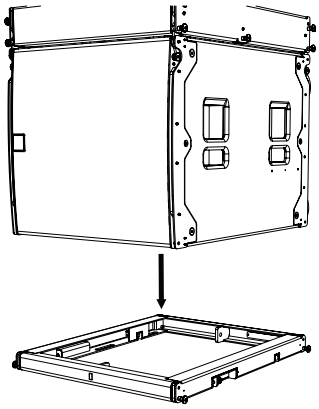

Remove the rigging pins from all four corners of the T12TRIG

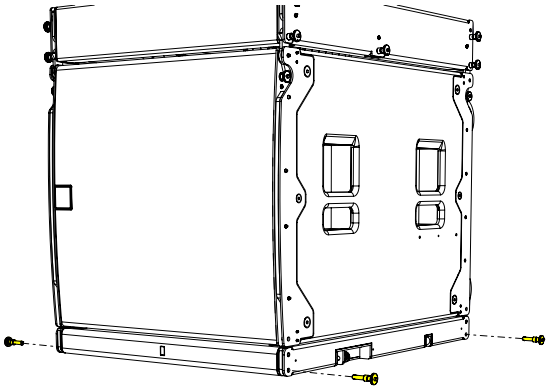

Rotate the four links on the T12TRIG and align them with the SXCF118 rigging hardware.

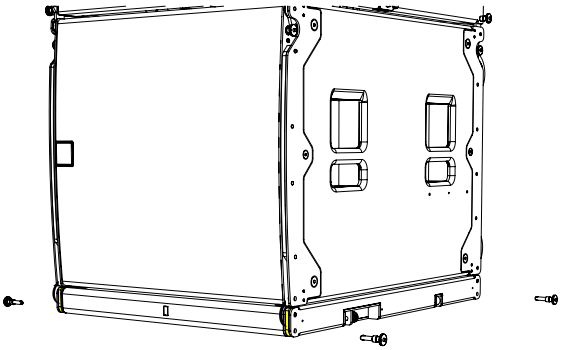

Copyright © 2026 Martin Audio Ltd.

Insert the rigging pins from the T12TRIG to the bottom of the SXCF118.

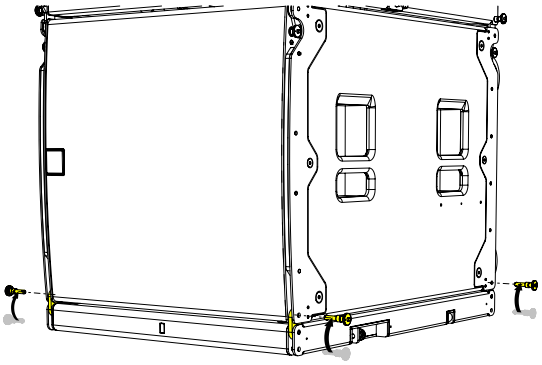

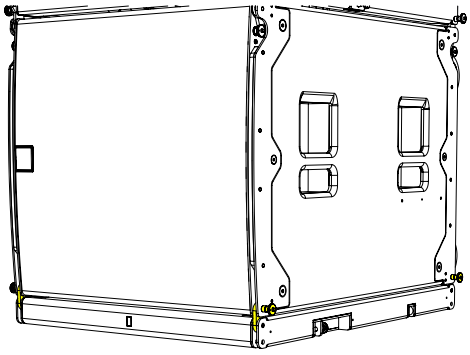

HF Right

Lift the array to a height where the cabinet can be positioned underneath. Either lift the cabinet into position or lower the array onto the cabinet below

Remove rigging pin from the T12TRIG and rotate the TORUS link through 180 degrees.

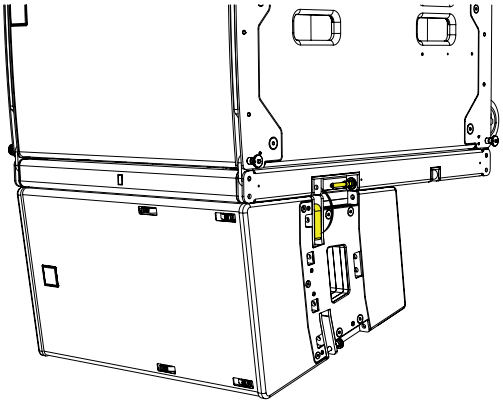

Replace the rigging pins to secure the cabinet to the T12TRIG.

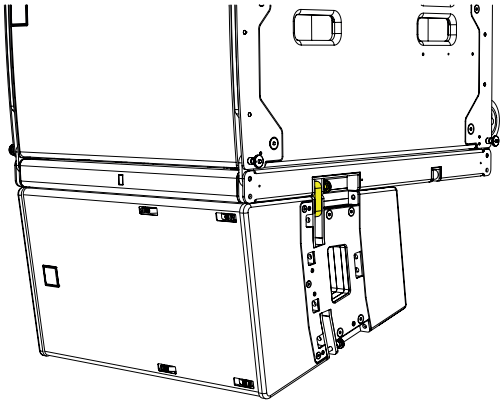

Copyright © 2026 Martin Audio Ltd.

Lift the array to a height where the next cabinet can be positioned underneath. Either lift the cabinet into position or lower the array onto the cabinet below.

Remove the rigging pins from the cabinet above, rotate the links on the cabinet below and insert the rigging pins to secure.

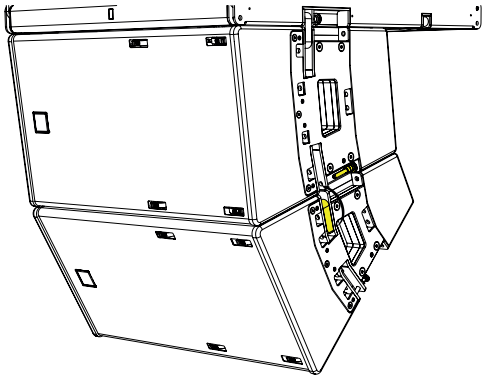

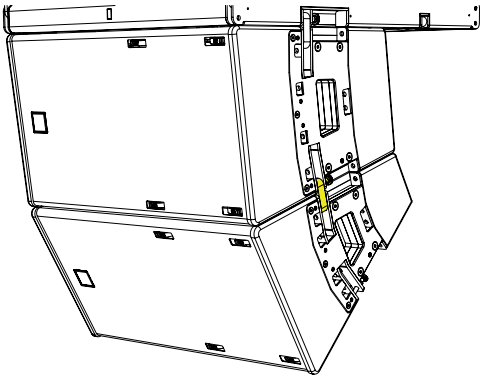

HF Left

Rotate the T12TRIG through 180 degrees and repeat the steps shown in the previous section to rig the T12TRIG beneath the SXCF118. Rotate the links on the T12TRIG.

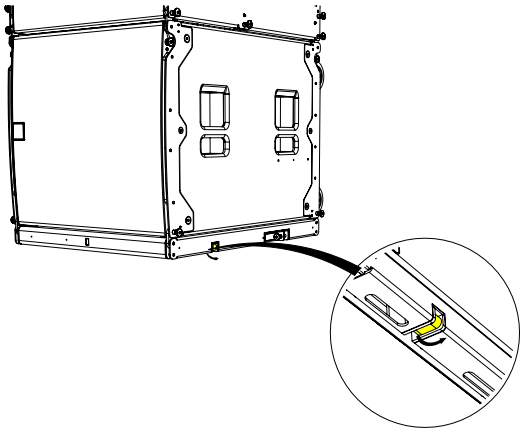

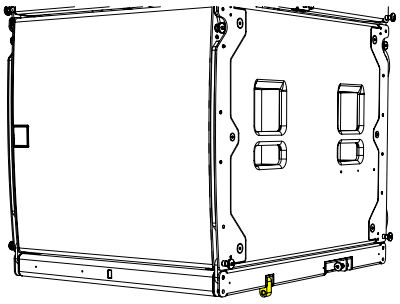

Lift the array to a height where the cabinet can be positioned underneath. Either lift the cabinet into position or lower the array onto the cabinet below and secure both side using the TORUS rigging pins.

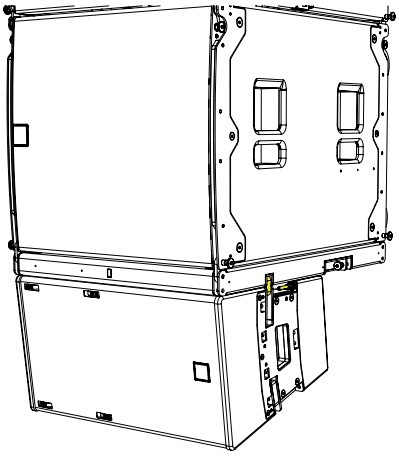

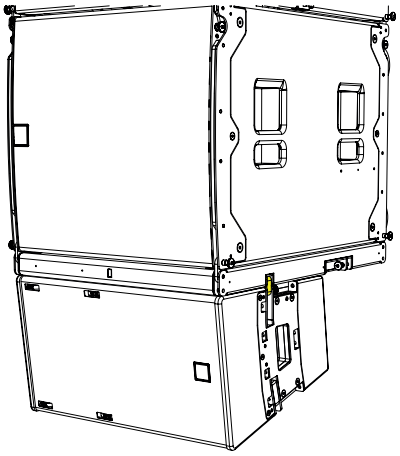

Copyright © 2026 Martin Audio Ltd.

Lift the array to a height where the next cabinet can be positioned underneath. Either lift the cabinet into position or lower the array onto the cabinet below.

Remove the rigging pins from the cabinet below, rotate the links on the cabinet above and insert the rigging pins to secure.

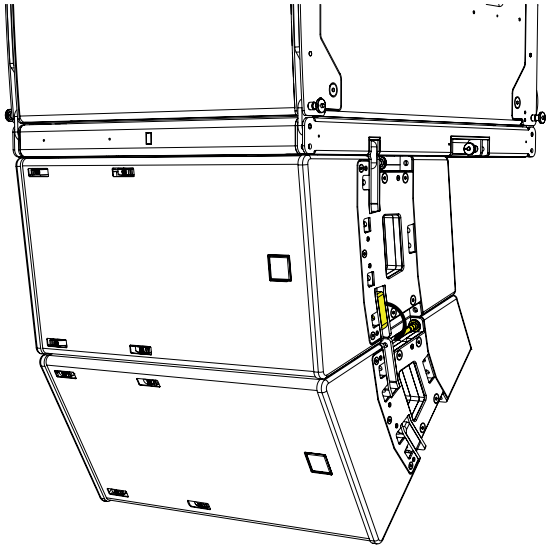

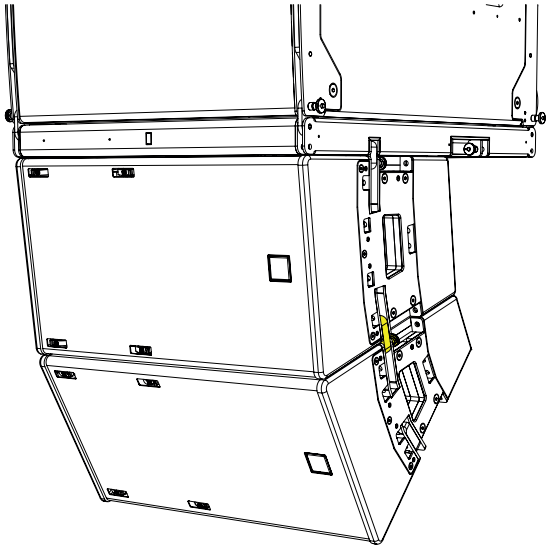

Copyright © 2026 Martin Audio Ltd.

GSRIG1530

There are two mounting plates, one on either the top or the bottom of the cabinet (when in landscape). Decide which orientation you want for the HF horn (left side or right side).

Align the two pins and place the GSRIG1530 onto the mounting bracket.

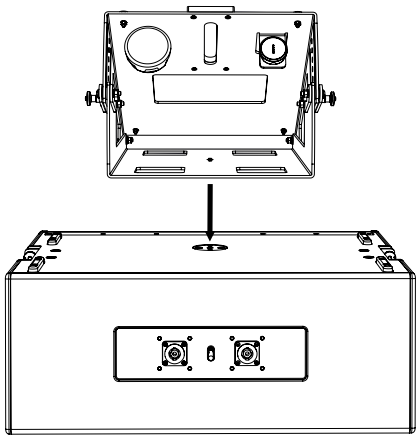

Remove the M10 handwheel from the stowing plate and secure to the plate through the mounting hole on the top plate of the GSRIG1530.

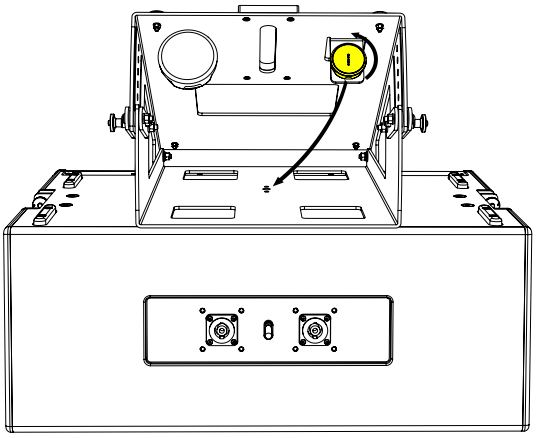

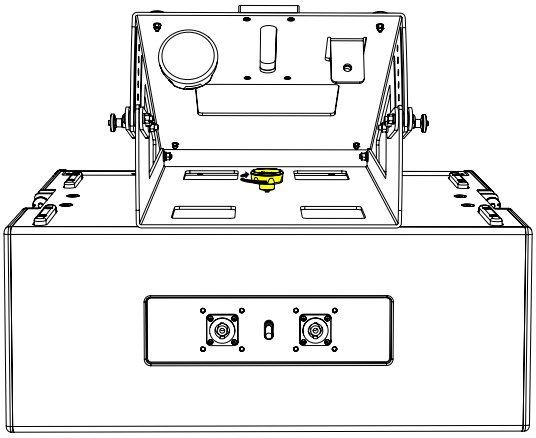

Copyright © 2026 Martin Audio Ltd.

Application example
Stack 2 x SXCF118 (one on top of the other).

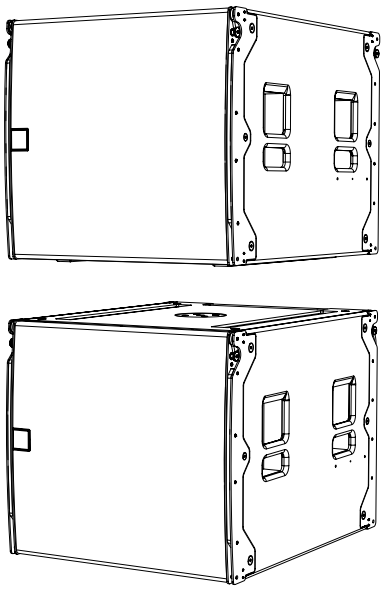

Remove the pins from the front SXCF118 to release the links.

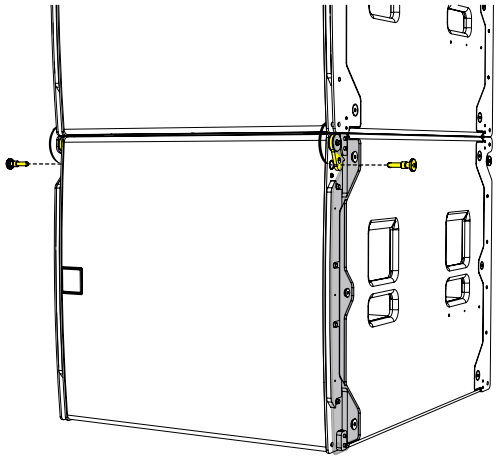

Rotate the links and line them up with the pin holes on the cabinet above.

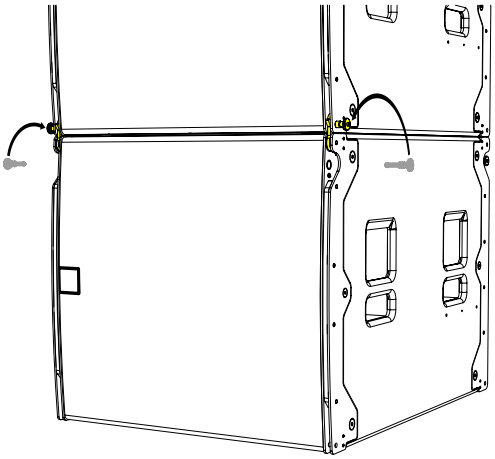

Copyright © 2026 Martin Audio Ltd.

Remove the rear pins and lift the link.

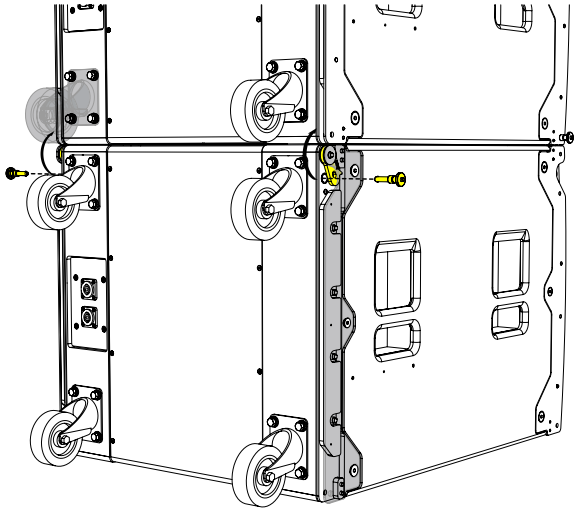

Insert the pins into the bottom of the top SXCF118 to lock the cabinets together.

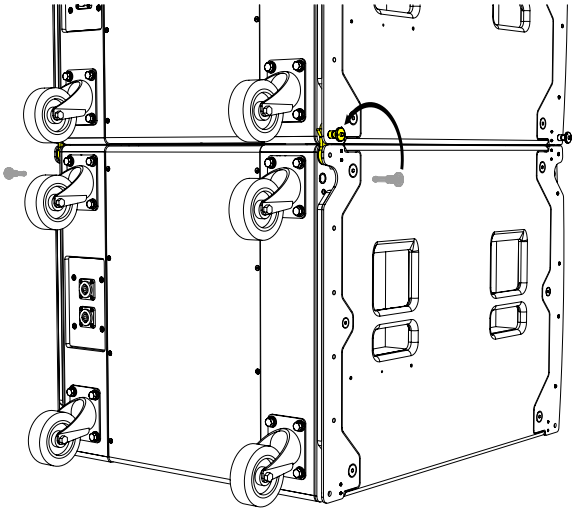

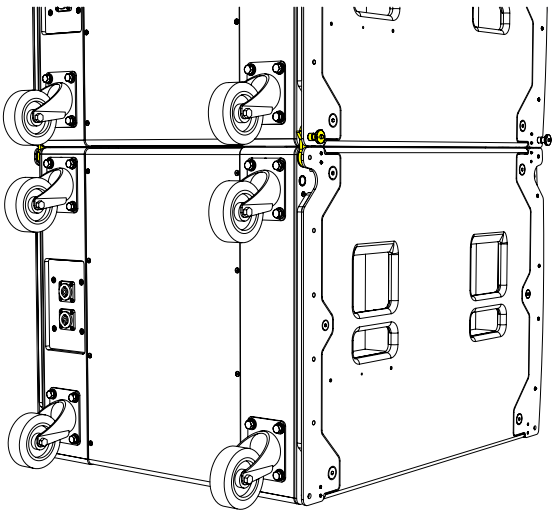

Copyright © 2026 Martin Audio Ltd.

Place the assembly onto the top of the SXCF118 stack.

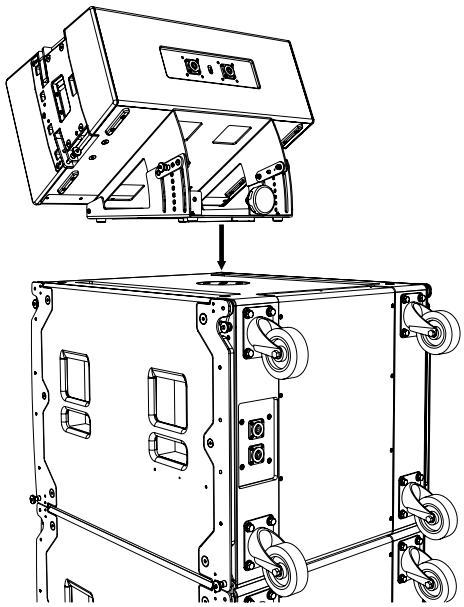

Remove the M20 handwheel from the stowing plate and secure to the M20 pole mount through the hole on the base plate of the GSRIG1530.

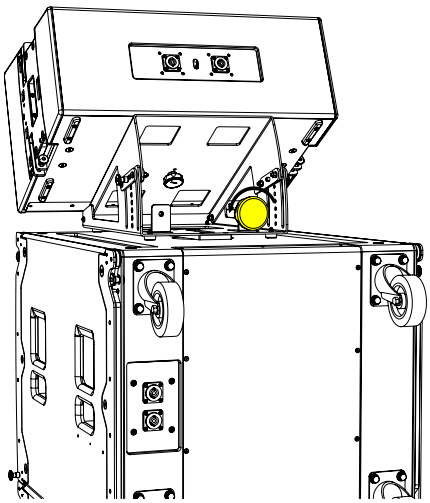

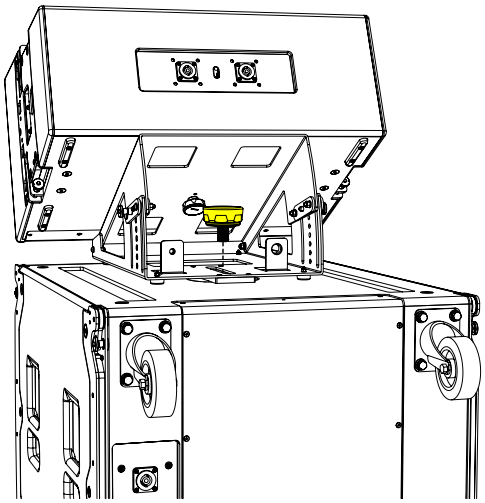

Copyright © 2026 Martin Audio Ltd.

Tighten the M20 handwheel securely.

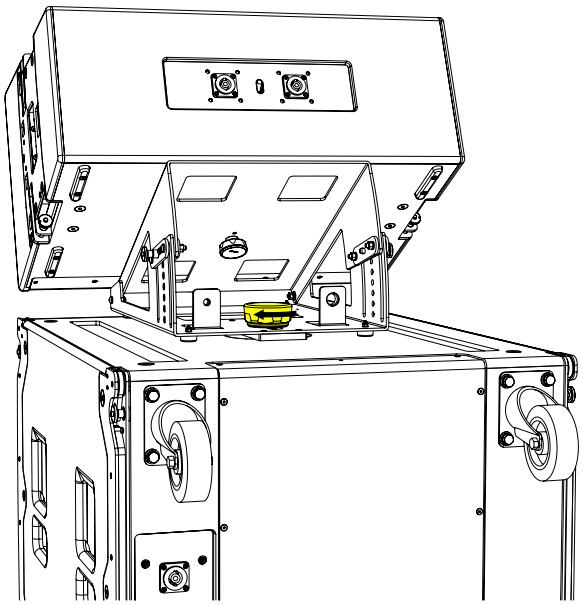

Adjust the angle of the GSRIG1530 by removing the rigging pins from the side plates before you add more T12 cabinets.

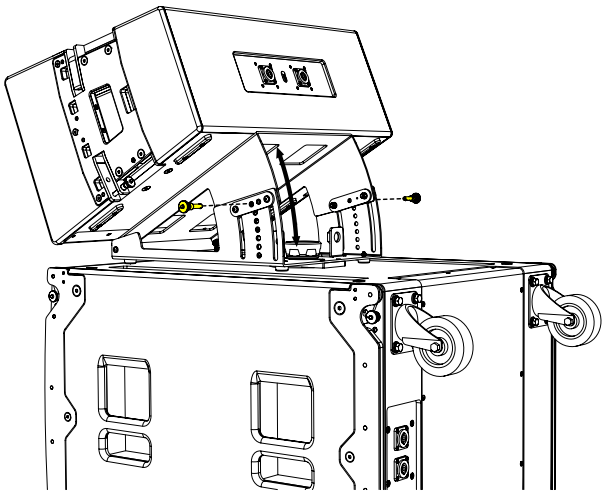

Replace the pins at the desired angle to lock into place.

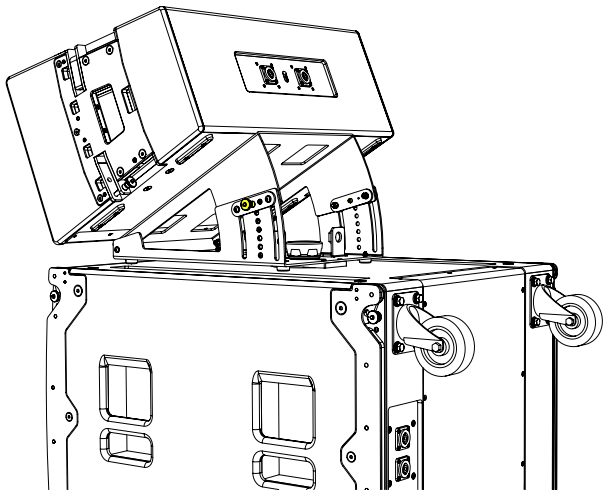

Copyright © 2026 Martin Audio Ltd.

Place a cabinet on top and remove the rigging pins from the cabinet above. Then rotate the links.

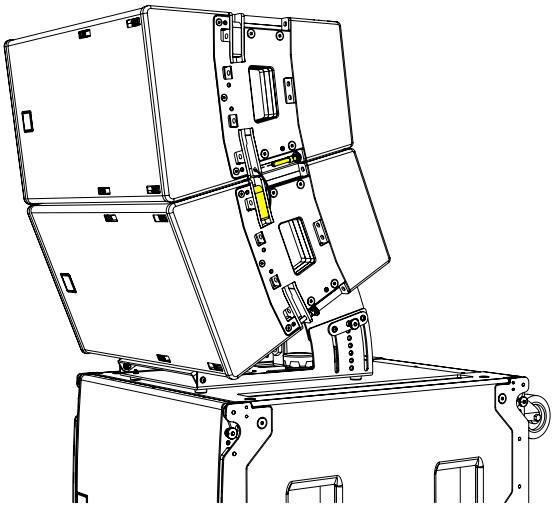

Replace the rigging pins to secure. Make sure the cabinet is secured on both sides.

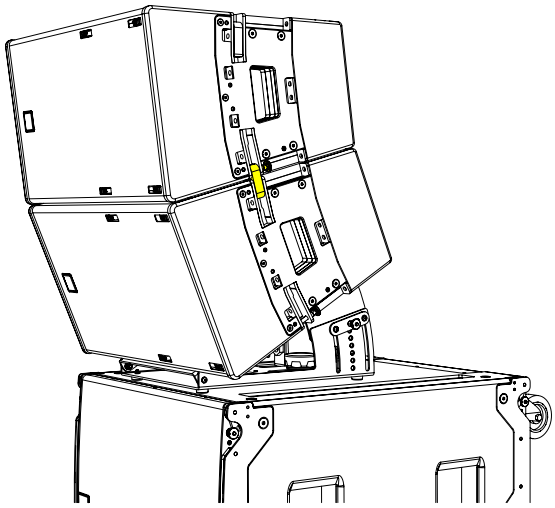

You can array a maximum of three T12 cabinets on top of the GSRIG1530. You can use this accessory with any Martin Audio subwoofer that has an M20 pole mount, such as the SXC(F)115, SXC(F)118 and SX218.

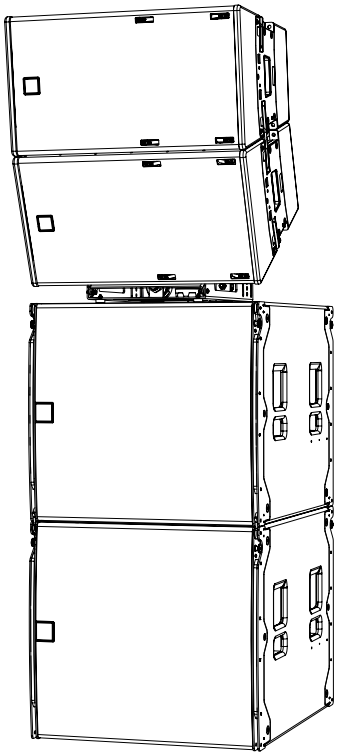

Copyright © 2026 Martin Audio Ltd.

T12PB

The T12PB is a rigging bar that can be mounted at the top and the bottom of the array to allows extreme array deployment for installations. When flying TORUS vertically the HF horn can be positioned on the left or the right to create symmetrical system design.

Linking down – HF horn to the left

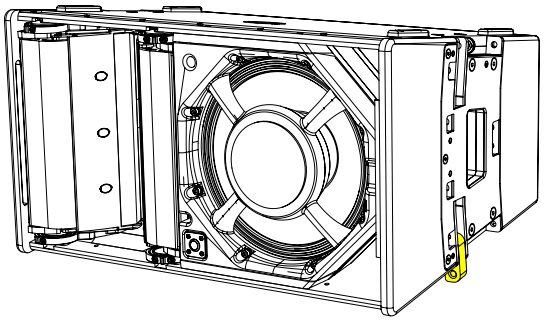

Linking up – HF horn to the right

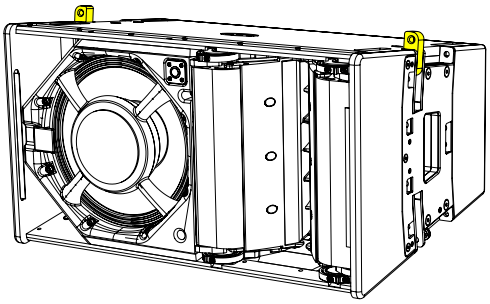

HF Right

Position the T12PB on top of the TORUS cabinet, rotate the links and insert the rigging pins to secure. Make sure the cabinet is secured on both sides.

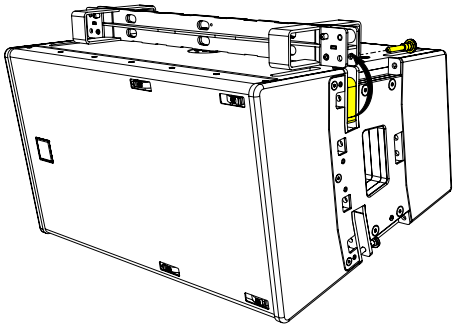

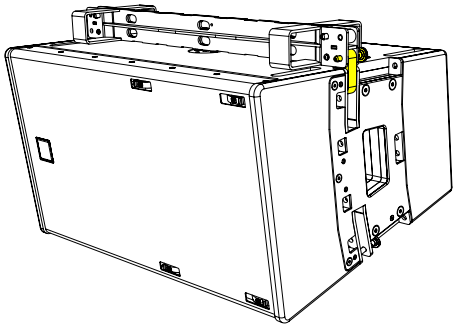

Lift the array to a height where the next cabinet can be positioned underneath. Either lift the cabinet into position or lower the T12PB onto the cabinet below.

Remove the rigging pins from the cabinet above, rotate the links on the cabinet below and insert the rigging pins to secure.

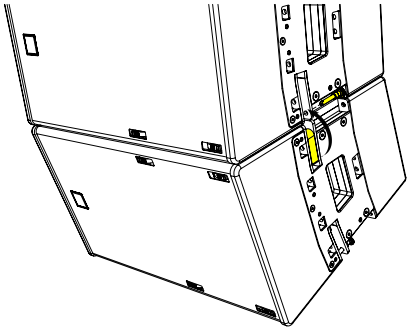

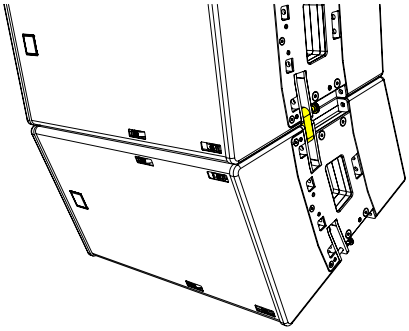

Copyright © 2026 Martin Audio Ltd.

Repeat the process until you have vertically arrayed the desired number of TORUS cabinets. You can fly a maximum of six cabinets from the T12PB.

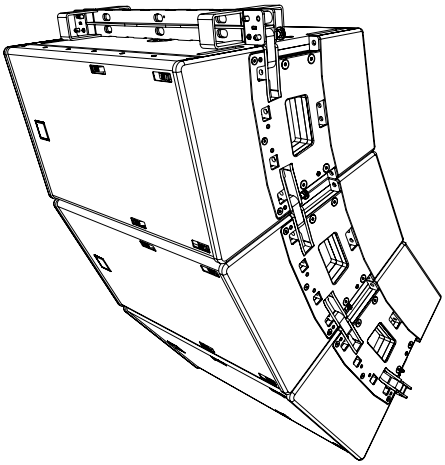

A second T12PB can be linked to the bottom of the array and used to achieve angles that are not possible with a single T12PB. The configuration can also be used to secure the array to stop it moving.

Invert the T12PB, remove the rigging pins and rotate the T12GRID links. Replace the pins to secure the grid to the cabinet.

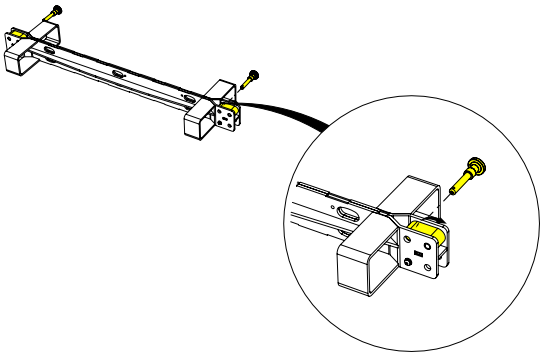

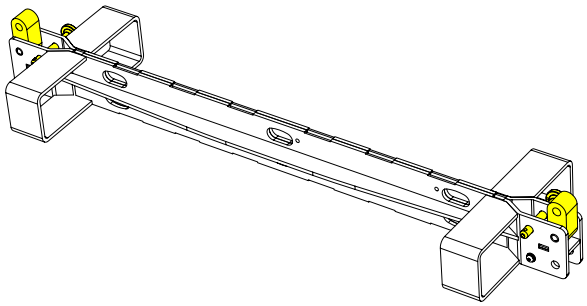

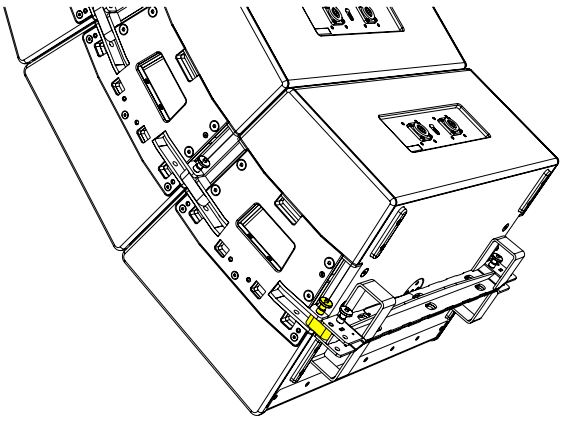

Copyright © 2026 Martin Audio Ltd.

Note: The T12PB rigging pin is not used for this configuration, but you do need to remove and replace it to rotate the link.

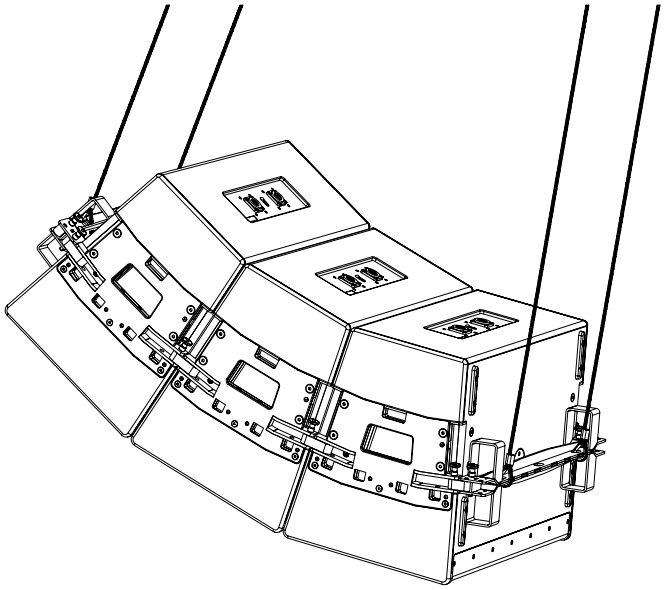

Copyright © 2026 Martin Audio Ltd.

POLERIG1530

The vertical angle for a pole mounted TORUS can be adjusted and secured with a tethered pin. The tilt angle will differ depending on the TORUS cabinet. Angles for both T1215 and T1230 are clearly displayed on the hardware.

There are two mounting plates, one on either side of the cabinet. Decide which orientation you want the HF horn (left side or right side). Align the two pins and place the POLERIG onto the mounting bracket.

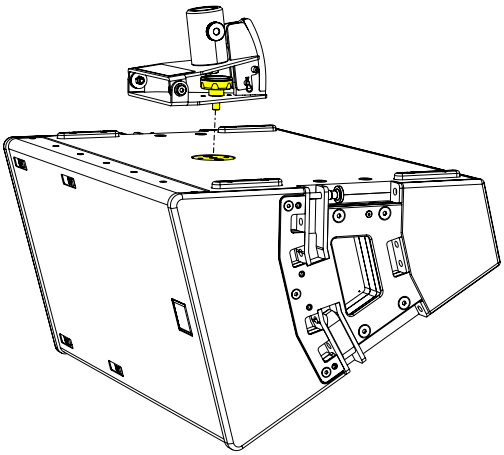

Turn the handwheel and tighten securely.

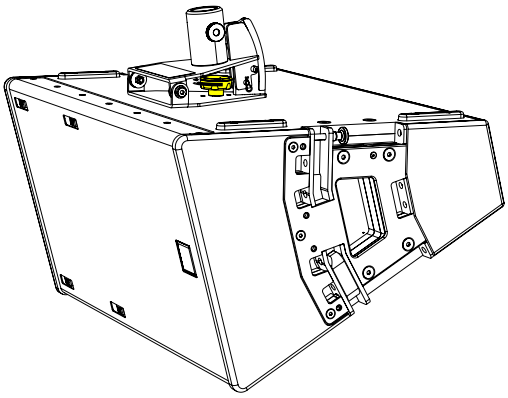

Before placing the cabinet onto a speaker stand or distance pole, undo the thumb wheel on the pole adaptor.

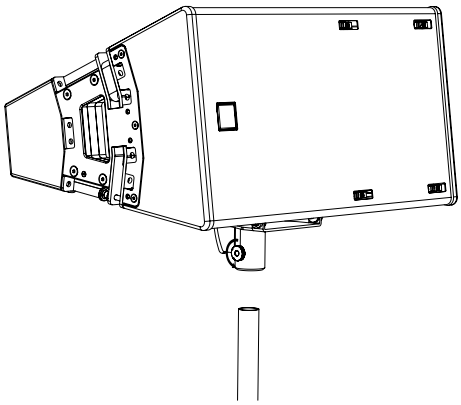

Copyright © 2026 Martin Audio Ltd.

Mount on the pole and tighten the thumb wheel to secure the POLERIG1530 to the speaker stand or distance pole and remove the index pin.

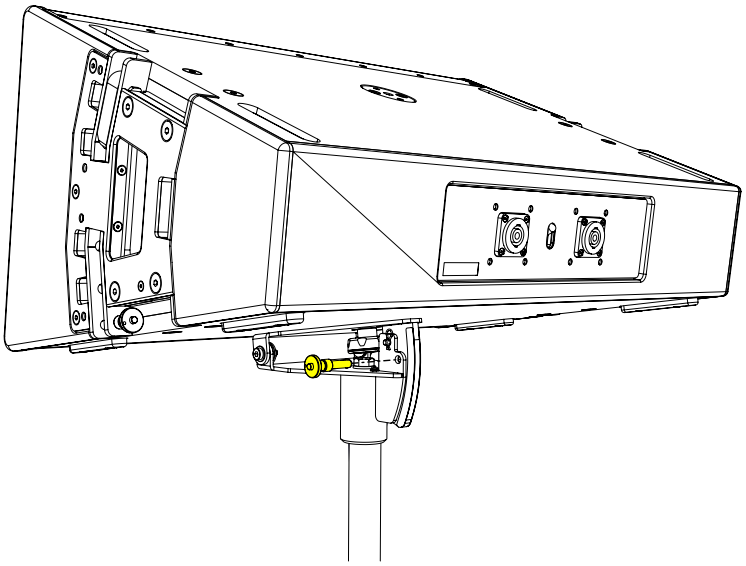

Copyright © 2026 Martin Audio Ltd.

SBAR40

The SBAR40 allows you to fly a single TORUS cabinet in landscape using 1 of 10 angles. You can mount the SBAR40 either way round depending on whether you need up or down-tilt. For rigging options, please refer to DISPLAY 3.

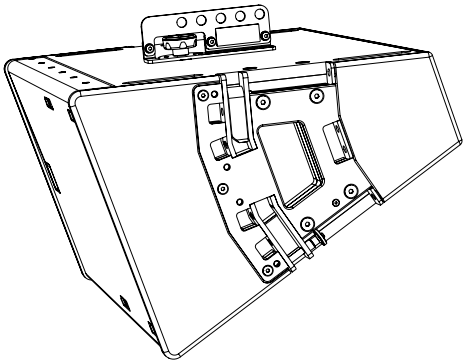

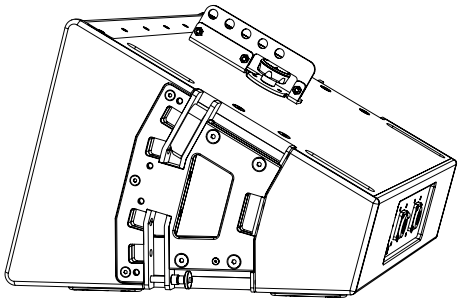

There are two mounting plates, one on either side of the cabinet. Decide which orientation you want the HF horn (left side or right side). Align the two pins and place the SBAR40 on the mounting bracket.

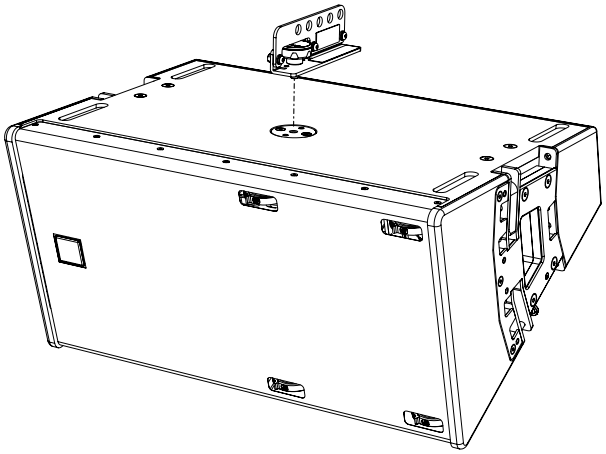

Turn the handwheel and tighten securely.

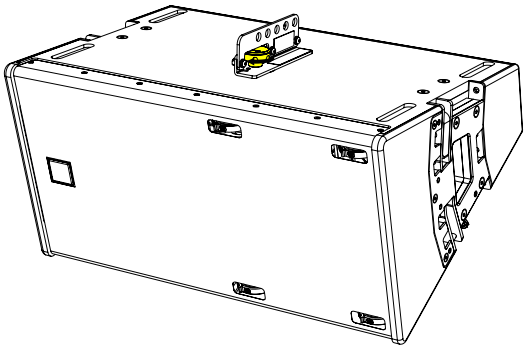

Copyright © 2026 Martin Audio Ltd.

You can use an SCS250 (see page 10) or a half coupler adaptor to suspend a single TORUS cabinet from the SBAR40. The instructions below, show a half adaptor, but fitting the SCS250 is very similar. Firstly, secure the half coupler to the adaptor and remove the pin.

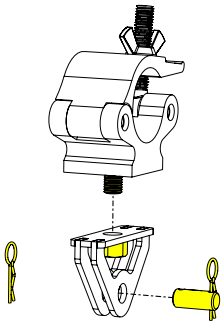

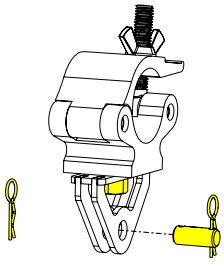

Secure the adaptor to the SBAR40 and replace the pin.

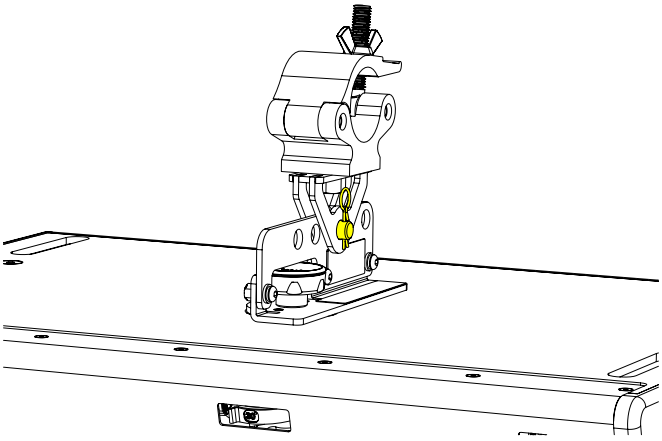

Secure the cabinet to the truss.

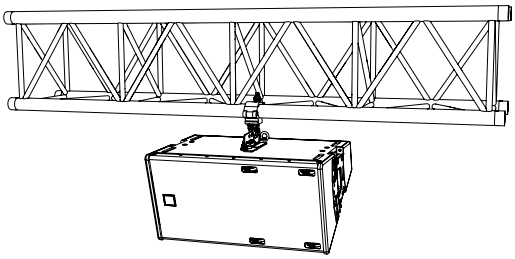

Copyright © 2026 Martin Audio Ltd.

Essential Maintenance

You must regularly inspect all rigging hardware for possible faults.

If you find any issues, repair the enclosures. Don't deploy them until deemed safe by a qualified expert.

The fixings that connect the rigging to the enclosures use internal Binx and Aerotight nuts. These nuts are designed to offer resistance to prevent the bolts from loosening, but they can become loose if the bolt has been adjusted or removed for service. Check that these fixings are tight and if not, do the following:

1. Remove the fixing bolt.
2. Clean the bolt using Loctite SF 7070 and dry.
3. Apply Loctite 243 to the bolt.
4. Fit the bolt.
5. Allow to dry for 24 hours before deploying the enclosure.

Torque setting

The following torque settings are for the highlighted bolts only. Don't use these settings for any other bolts.

M8 bolts highlighted in green below left (rigging plate bolts)	8 Nm
M6 bolts highlighted in green below right (round mounting plate bolts)	8 Nm
M6 bolts highlighted in red below (rigging plate bolts)	4 Nm

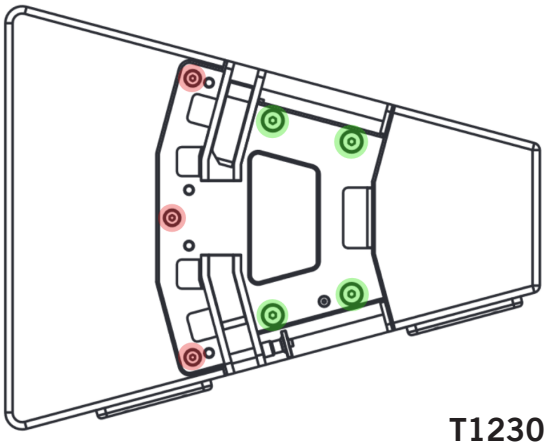

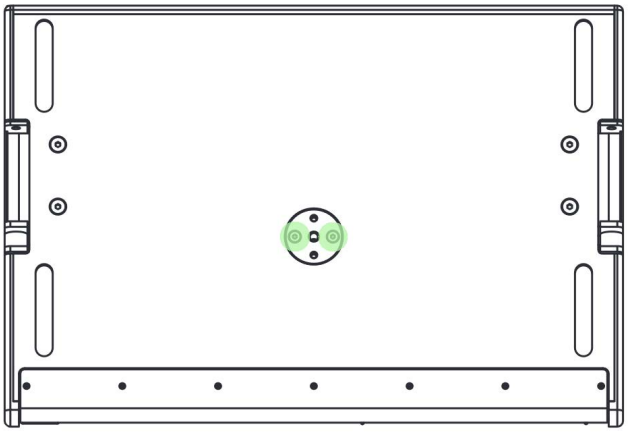

T1230

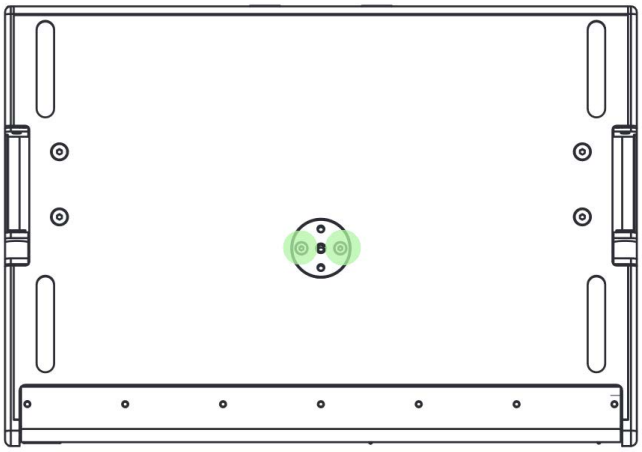

T1215

Copyright © 2026 Martin Audio Ltd.

Replacing the LF Driver

To replace this driver, you need 4mm and 6mm hex tools.
First, remove the 14 countersunk hex fasteners from the grille using the 4mm hex tool.

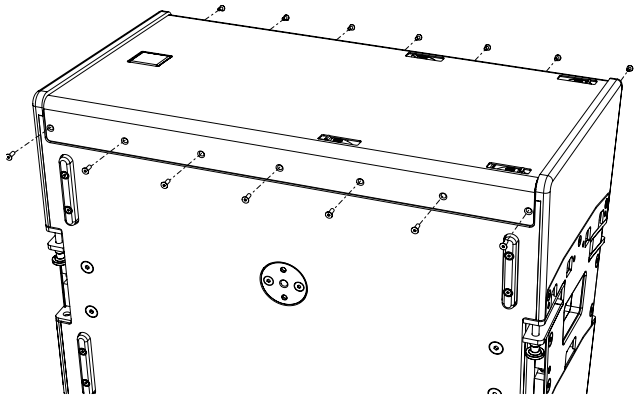

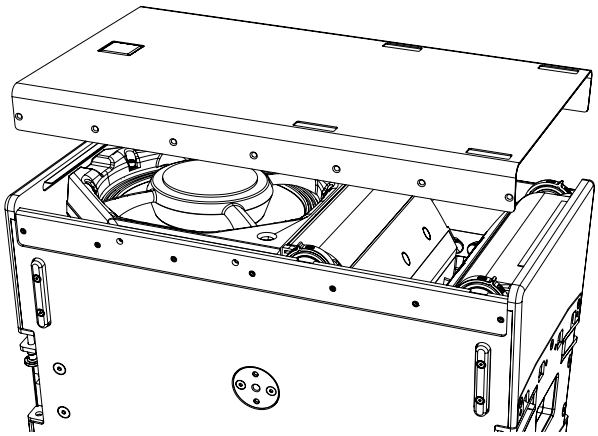

Remove the socket cap fasteners from the LF phase bung in a star pattern. There are 8 around the circumference of the driver and 2 on the side next to the HF horn (use the 6mm hex tool).

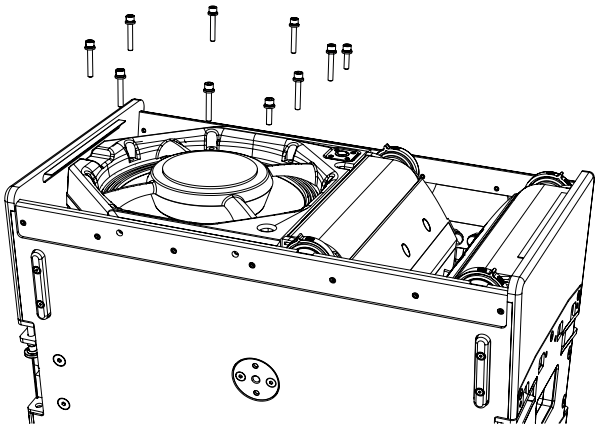

Remove the phase bung and disconnect the spade terminals for the LED if necessary.

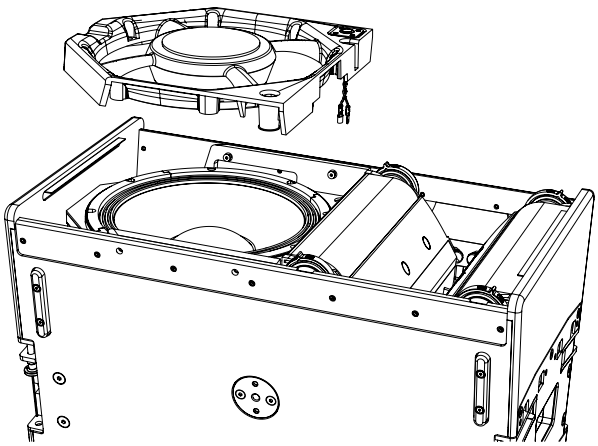

Copyright © 2026 Martin Audio Ltd.

Remove the LF driver and disconnect the spade terminals.

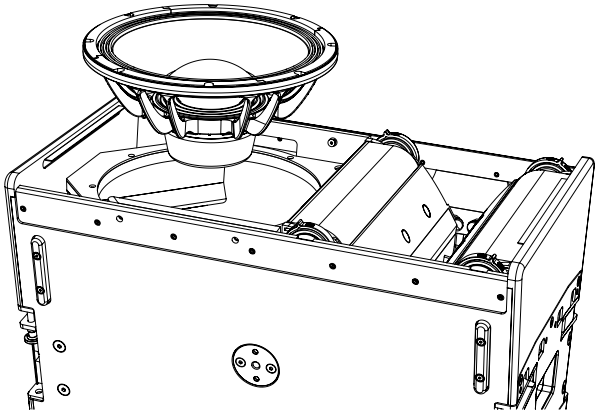

Replacing the High Frequency Diaphragms

Remove the 6 rubber bungs from the horn flare

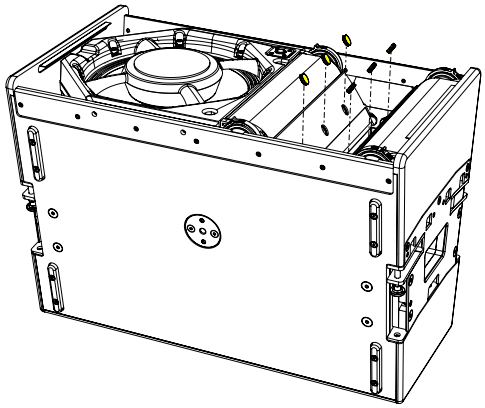

Remove the 6 posi drive screws from the horn flare

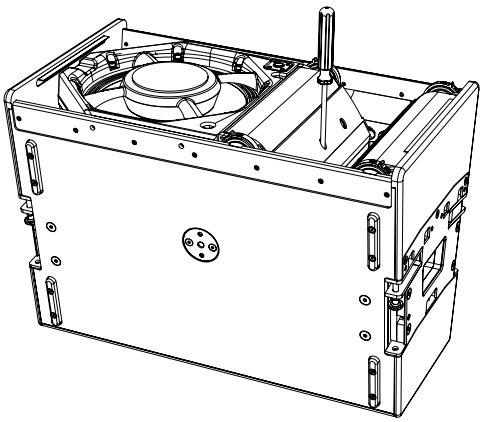

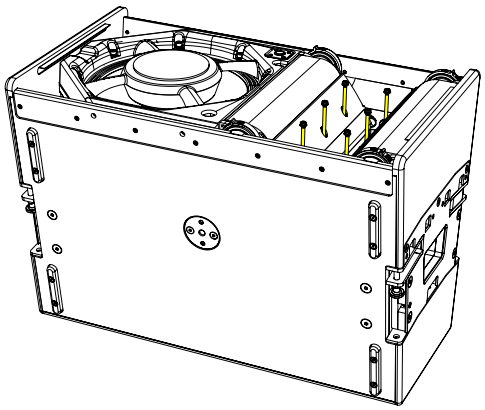

Copyright © 2026 Martin Audio Ltd.

Remove the horn assembly from the cabinet and place driver side up on a flat service.

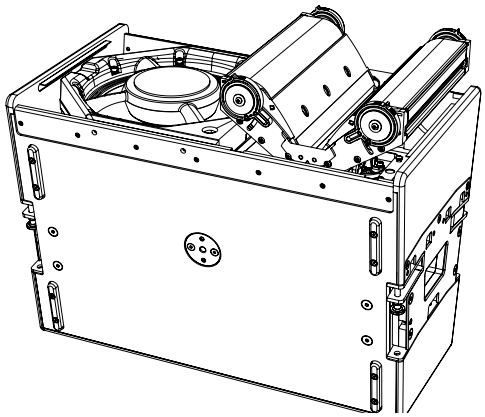

Remove the socket cap fasteners from the horn to remove the compression driver.

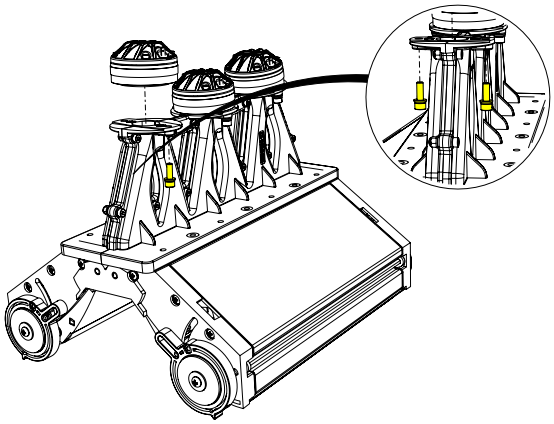

Remove the socket cap fasteners from the backplate to replace the diaphragm.

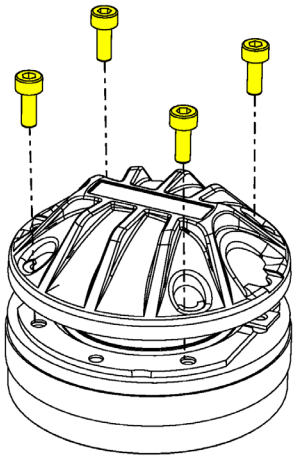

Copyright © 2026 Martin Audio Ltd.

Specifications

T1215 and T1230

PRODUCT NAME	TORUS: T1215	TORUS: T1230
TYPE	Passive 2-way Constant Curvature 15° enclosure	Passive 2-way Constant Curvature 30° enclosure
FREQUENCY RESPONSE (with iKON settings)	65Hz – 18kHz ± 3dB, -10dB @ 50Hz	65Hz – 18kHz ± 3dB, -10dB @ 50Hz
DRIVERS	LF: 12”, 3” voice coil, neodymium HF: 3 x 1” exit, 1.4” voice coil, HT polymer dome neodymium compression driver	LF: 12”, 3” voice coil, neodymium HF: 3 x 1” exit, 1.4” voice coil, HT polymer dome neodymium compression driver
SENSITIVITY	(2.83V 1m free-field) 100dB	(2.83V 1m free-field) 99dB
NOMINAL IMPEDANCE	8 ohms	8 ohms
RATED POWER	AES 400W, PEAK 1600W	AES 400W, PEAK 1600W
MAXIMUM SPL (SYSTEM)	128 dB continuous, 134 dB peak*	126 dB continuous, 132 dB peak*
DISPERSION	60-75-90° horizontal, 15° vertical	60-75-90° horizontal, 30° vertical
PIN CONNECTIONS (INPUT)	1+/- or 2+/-	1+/- or 2+/-
PIN CONNECTIONS (LINK)	1+/- and 2+/-	1+/- and 2+/-
DIMENSIONS	(W) 650mm, (H) 369mm, (D) 452mm (W) 25.59ins, (H) 14.51ins, (D) 17.80ins	(W) 650mm, (H) 350mm, (D) 442mm (W) 25.59ins, (H) 13.76ins, (D) 17.40ins
WEIGHT	31kg (68.34 lbs)	26kg (57.32 lbs)

*Martin Audio specifies a crest factor of 2 with 6dB between peak and continuous. This best mirrors real-world performance. To compare with manufacturers who quote a crest factor of 4 (that is 12dB between continuous and peak) simply add 6dB.

Copyright © 2026 Martin Audio Ltd.

Technical Drawings

T1215

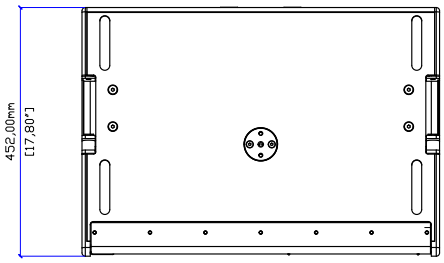

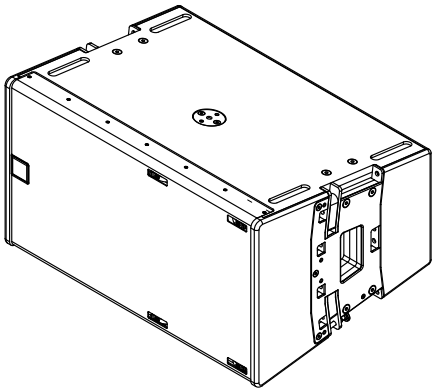

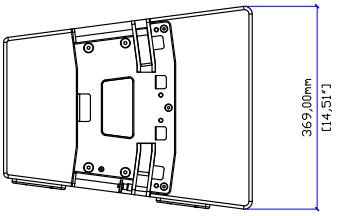

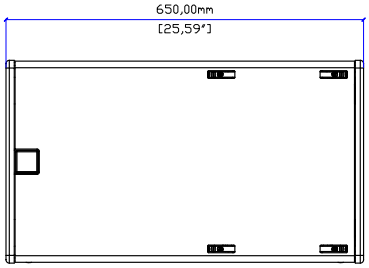

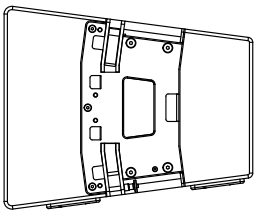

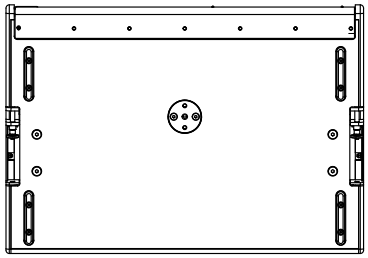

Copyright © 2026 Martin Audio Ltd.

T1230

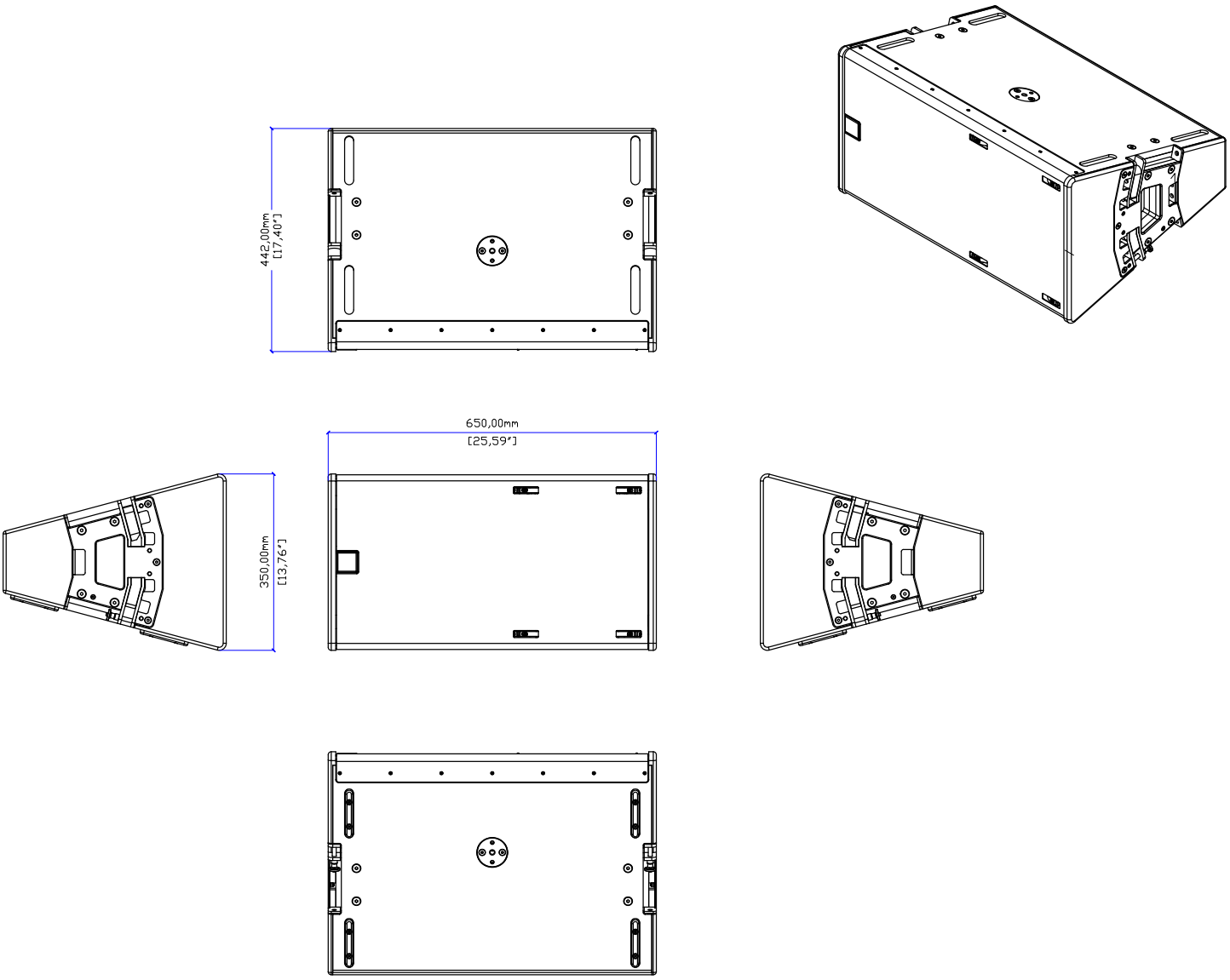

Copyright © 2026 Martin Audio Ltd.

Warranty

Warranty Statement

Martin Audio TORUS Series loudspeakers are warranted against manufacturing defects in materials or craftsmanship over a period of 5 years from the date of original purchase.

During the warranty period Martin Audio will, at its discretion, either repair or replace products which prove to be defective provided that the product is returned in its original packaging, shipping prepaid, to an authorised Martin Audio service agent or distributor.

Martin Audio Ltd. cannot be held responsible for defects caused by unauthorised modifications, improper use, negligence, exposure to inclement weather conditions, act of God or accident, or any use of this product that is not in accordance with the instructions provided by Martin Audio. Martin Audio is not liable for consequential damages.

This warranty is exclusive and no other warranty is expressed or implied. This warranty does not affect your statutory rights.

Copyright © 2026 Martin Audio Ltd.

Martin Audio Limited

Century Point

Halifax Road

Cressex Business Park

High Wycombe

Buckinghamshire

HP12 3SL

England

FOR SALES ENQUIRIES:

UK

+44 (0)1494 535312

info@martin-audio.com

NORTH AMERICA

+1 323-381-5310

www.martin-audio.com

All information is Copyright © 2024 Martin Audio Ltd.

Martin Audio, the Martin Audio logo and Hybrid are registered trademarks of Martin Audio Ltd. in the United Kingdom, United States and other countries; all other Martin Audio trademarks are the property of Martin Audio Ltd.

MARTIN AUDIO
LONDON