TWAUDiO®

SBT20i

Assembly Instructions

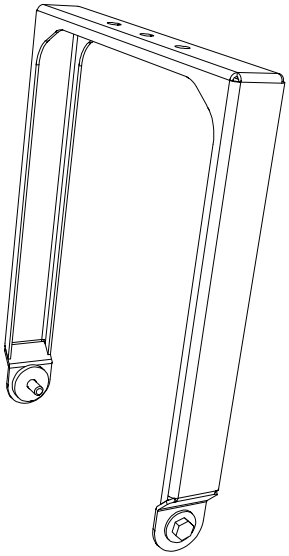

Introduction

Thank you for choosing a high-quality product “MADE IN GERMANY” from the brand TW AUDiO.

The swivel bracket SBT20i is an accessory for the T20i loudspeaker.

It is characterized by a subtle look, a remarkable size to weight ratio and ease of use.

If you lend your product to another party, inform that party of the safety-related operating procedures and hand over this assembly guide. If you require additional copies of this manual, you can obtain them free of charge from TW AUDiO or download them from www.twaudio.de

Instructions in this user manual

Strictly adhere to the instructions contained in this operating manual that are marked as follows:

This symbol in combination with the signal word “Warning” identifies a potentially hazardous situation. Failure to comply with this safety instruction can lead to serious injury or even death.

This symbol in combination with the signal word “Caution” identifies a potentially hazardous situation. Failure to comply with this safety instruction can lead to light or moderate injury.

This symbol in combination with the signal word “Note” identifies a potentially hazardous situation. Failure to comply with this safety instruction can lead to product damage.

This symbol in combination with the signal word “Tip” identifies additional information or notes that will simplify working with TW AUDiO products on the basis of practical experience.

Notes on the products

Read manual before use!

Before using the device, carefully read the assembly instructions and keep it with the SBT20i swivel bracket.

General information

Assembly instructions: OM-SBT20i
Version 3.0 en, 04/2025
© by TW AUDiO INTERNATIONAL GmbH 2025; all rights reserved.

All information contained in this operating manual was correct to the best of our knowledge at the time of printing.

Quality warranties or assurance of suitability for a certain type of use based on the technical specifications, dimensions and weights are not granted by TW AUDiO.

TW AUDiO also shall not assume liability for any secondary damage (property damage and/or personal injury) nor for the failure to comply with this operating manual!

TW AUDiO reserves the right to update this document based on recent developments.

TW AUDiO INTERNATIONAL GmbH
Osterholzallee 140-2
71636 Ludwigsburg
Germany

Phone : + 49 (0) 71 41-48 89 89 0
Fax: + 49 (0) 71 41-48 89 89 99
E-Mail: info@twaudio.de
WWW: www.twaudio.de

Content

1. Safety | Intended use 5
2. Overview 7
2.1 Components 7
3. Technical data 8
3.1 Data sheet 8
4. Commissioning 9
4.1 Setup 9
4.2 Preparation T20i loudspeaker 9
4.3 Needed tools for setup 10
4.4 Wind load 10
4.5 Assembly SBT20i to loudspeaker 11
4.6 Assembly SBT20i swivel bracket to ceiling 11
5. Transport and storage 12
6. CE Conformity Declaration 13
7. Disposal 13

1. Safety | Intended use

Please adhere to the following safety instructions to avoid risks when using accessories.

The SBT20i swivel bracket was developed for use in professional sound systems. The swivel bracket may only be used by trained and qualified personnel.

Note the operating modes described in this assembly instructions. Other uses are not permissible.

Damage caused by improper use is not covered by TW AUDiO.

WARNING

Before every operation, check the scope of delivery of the SBT20i swivel bracket for its completeness and ensure that all parts are in perfect condition.

The scope of delivery includes specified components. Only use the recommended and certified components.

WARNING

The SBT20i swivel bracket may only used with the T20i loudspeaker.

This rigging manual describes how to use the SBT20i swivel bracket correctly. Any other use shall be deemed improper and may result in damage or even injury.

Modifications or alterations to individual parts of the SBT20i swivel bracket are not permitted! Danger to life!

CAUTION

The SBT20i swivel bracket is designed both for indoor and outdoor use.

WARNING

The SBT20i swivel bracket may only be used by trained and qualified personnel. Personnel must check the SBT20i swivel bracket for suitability before each use.

WARNING

The SBT20i swivel bracket must be taken out of operation immediately as soon as visible damage to the parts can be seen.

WARNING

Please keep all elements of the SBT20i swivel bracket away from children! The small parts can easily be swallowed and lead to suffocation!

WARNING

The payload of the SBT20i swivel bracket is designed of one T20i loudspeaker. Do not exceed this payload.

WARNING

Before mounting the SBT20i swivel bracket check that e.g. ceilings are capable to carrying the payload of the components.

WARNING

Make sure that no water pipes, electrical lines or any other lines are behind the intended place of mounting.

WARNING

Only use wall plugs and screws which are suitable for the intended mounting and structural fabric. All screws must be set and tightened properly. Ensure that the fixing holes have the correct depth and diameter. Always use all fixing holes.

WARNING

When moving (assembling, dismantling, maintaining) the SBT20i swivel bracket with T20i loudspeaker, ensure sufficient space to prevent collisions with other objects.

CAUTION

Do not squeeze or twist the electrical cables of the T20i loudspeaker during the installation of the SBT20i swivel bracket! The respective national electrotechnical rules and regulations are applicable.

WARNING

All screw connections should be checked each time the SBT20i swivel bracket are installed. Tighten all loose screws. If this is no longer possible, the screws must be replaced.

2. Overview

2.1 Components

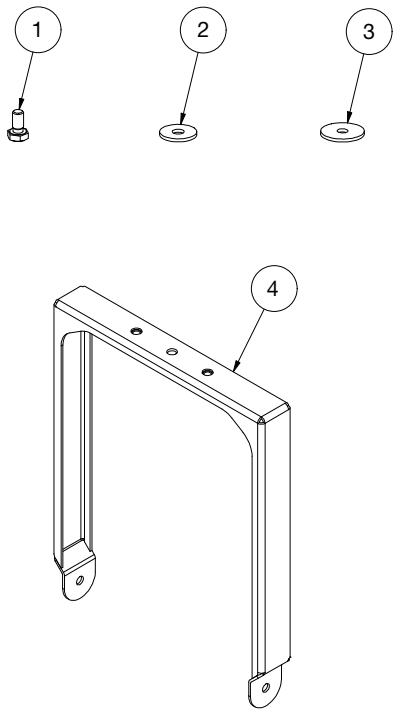

Figure 2.1 - Overview

1. Hexagon screw M10 x 20..... 2 pieces
2. Washer (metal)..... 2 pieces
3. Rubber break washer ..... 2 pieces
4. Swivel bracket SBT20i..... 1 piece

3. Technical data

3.1 Data sheet

Maximum load capacity	1x T20i
Dimensions (h x w x d)	420 x 340 x 50 mm [16.54 x 13.39 x 1,97 in]
Weight	3,0 kg [6.6 lbs]
Surface	Powder-coated

4. Commissioning

4.1 Setup

The SBT20i swivel bracket is designed for hanging operation. TWAUDiO provides a wide range of accessories to securely attach the swivel bracket.

WARNING

Please note that setting up the system setups always requires two persons!

WARNING

Make sure that all system structures are located on a firm, level surface and that the surface can bear the total weight!

NOTE

TWAUDiO recommends using only the accessories specified by TWAUDiO for securing and mounting loudspeakers.

4.2 Preparation T20i loudspeaker

Please note that when the T20i loudspeaker is delivered, a plastic threaded plug is included in all M10 threads because of production reasons.

Before installing the swivel bracket, remove the threaded plugs from the M10 threads that are required.

To do this, follow these steps:

NOTE

1. Carefully carve the textured paint with a cutter knife on the edge of the threaded plugs. Be careful not to damage the remaining textured paint on the loudspeaker.
2. Then remove the threaded plugs using the torque wrench and the Torx TX30 bit insert.

4.3 Needed tools for setup

Have the following tools ready for each setup:

- Cutter knife
- Torque wrench
- Bit insert for torque wrench: TX30

4.4 Wind load

WARNING

Before setting up the system outdoors, consider unexpected wind conditions at the operation site!

Disassemble your system immediately when wind speeds exceed 8 bft (34 to 40 kn / 62 to 74 kph / 38.5 to 46 mph) and secure the system components!

Make sure that there are no persons in the immediate vicinity of the system structure!

WARNING

Make sure that the system structures are not operated over the audience at wind speeds in excess of 6 bft (22 to 27 kn / 39 to 49 kph / 24.2 to 30.45 mph) and that there are no persons in the immediate vicinity of the system structure!

4.5 Assembly SBT20i to loudspeaker

NOTE

Mount positions 1 to 3 (see figure 2.1) on both sides as shown in figure 4.4.

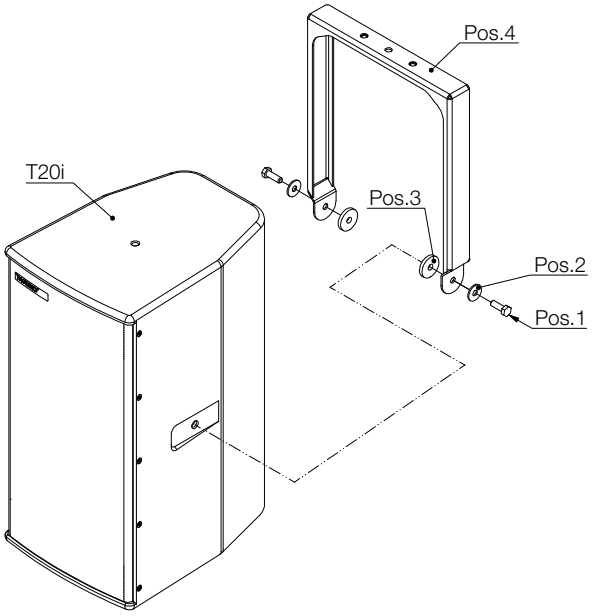

Figure 4.5 - Assembly SBT20i to T20i loudspeaker

4.6 Assembly SBT20i swivel bracket to ceiling

WARNING

Attach the SBT20i swivel bracket to the ceiling by using all three holes located on the crossbar. Make sure that you use suitable fastening material and that the connections are set firmly and correctly!

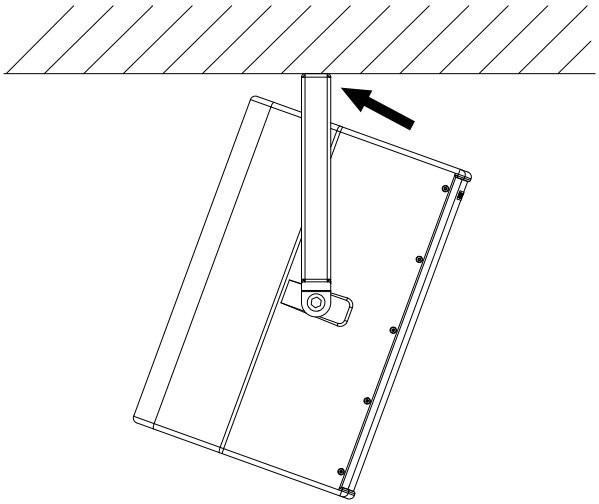

Figure 4.6 - Assembly SBT20i with T20i to ceiling

5. Transport and storage

NOTE

When transporting and storing the unit, it is important to ensure that the surface of the swivel bracket are not damaged. Moisture can penetrate where steel surfaces are exposed by scratches and result in corrosion.

This is why the product should be transported and stored in a safe, careful, dry and largely dust-free manner.

The following spare and accessory parts for the swivel bracket are available from TW AUDiO:

- Hexagon screw M10 x 20
- Washer (metal)
- Rubber break washer

The original packaging is unsuitable as permanent storage and transport packaging.

6. CE Conformity Declaration

Copy and translation of the original CE Conformity Declaration:

We hereby declare that the below-referenced components by virtue of their design and construction, and in the configuration placed on the market by us, satisfy the safety and health requirements of the applicable EC directives. This declaration becomes invalid in case of modifications that have not been approved by us.

This declaration applies to the following components

• SBT20i

as well as all model variants based on these, provided that they correspond to the original factory models and have not been technically modified in any way.

Applicable directives:

• 2001/95/EG

Applicable national standards and technical specifications:

• DIN EN 18 800
• DIN EN ISO 12 100
• DGUV Vorschrift 17 und 18

Ludwigsburg, Germany, January 1st, 2021

Bernhard Wüstner

7. Disposal

If you have any question regarding the disposal of used devices, please contact us under the following telephone number:

+49 (0) 71 41 - 48 89 89 0

In countries outside of the European Union, comply with local regulations.

TW AUDiO INTERNATIONAL GmbH
Osterholzallee 140-2
71636 Ludwigsburg
Germany

Phone: + 49 (0) 71 41-48 89 89 0
Fax: + 49 (0) 71 41-48 89 89 99
E-Mail: info@twaudio.de
WWW: www.twaudio.de