TWAUDiO®

SBC15

Assembly Instructions

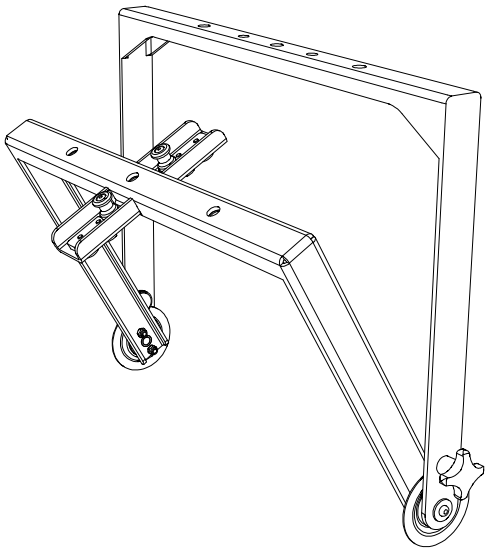

Introduction

Thank you for choosing a high-quality product “MADE IN GERMANY” from the brand TW AUDiO.

The swivel bracket SBC15 is an accessory for the C15 loudspeaker.

It is characterized by a subtle look, a remarkable size to weight ratio and ease of use.

If you lend your product to another party, inform that party of the safety-related operating procedures and hand over this assembly guide. If you require additional copies of this manual, you can obtain them free of charge from TW AUDiO or download them from www.twaudio.de

Instructions in this user manual

Strictly adhere to the instructions contained in this operating manual that are marked as follows:

This symbol in combination with the signal word “Warning” identifies a potentially hazardous situation. Failure to comply with this safety instruction can lead to serious injury or even death.

This symbol in combination with the signal word “Caution” identifies a potentially hazardous situation. Failure to comply with this safety instruction can lead to light or moderate injury.

This symbol in combination with the signal word “Note” identifies a potentially hazardous situation. Failure to comply with this safety instruction can lead to product damage.

This symbol in combination with the signal word “Tip” identifies additional information or notes that will simplify working with TW AUDiO products on the basis of practical experience.

Notes on the products

Read manual before use!

Before using the device, carefully read the assembly instructions and keep it with the SBC15 swivel bracket.

General information

Assembly instructions: OM-SBC15
Version 3.0 en, 05/2025
© by TW AUDiO INTERNATIONAL GmbH 2025; all rights reserved.

All information contained in this operating manual was correct to the best of our knowledge at the time of printing.

Quality warranties or assurance of suitability for a certain type of use based on the technical specifications, dimensions and weights are not granted by TW AUDiO.

TW AUDiO also shall not assume liability for any secondary damage (property damage and/or personal injury) nor for the failure to comply with this operating manual!

TW AUDiO reserves the right to update this document based on recent developments.

TW AUDiO INTERNATIONAL GmbH
Osterholzallee 140-2
71636 Ludwigsburg
Germany

Phone : + 49 (0) 71 41-48 89 89 0
Fax: + 49 (0) 71 41-48 89 89 99
E-Mail: info@twaudio.de
WWW: www.twaudio.de

Content

1. Safety | Intended use 5
2. Overview 7
2.1 Components 7
3. Technical data 8
3.1 Data sheet 8
4. Commissioning 9
4.1 Setup 9
4.2 Wind load 10
4.3 Assembly SBC15 to loudspeaker 11
4.4 Assembly SBC15 swivel bracket to trusses or ceiling 12
4.5 Assembly SBC15 swivel bracket on tripod 13
5. Transport and storage 14
6. CE Conformity Declaration 15
7. Disposal 15

1. Safety | Intended use

Please adhere to the following safety instructions to avoid risks when using accessories.

The SBC15 swivel bracket was developed for use in professional sound systems. The swivel bracket may only be used by trained and qualified personnel.

Note the operating modes described in this assembly instructions. Other uses are not permissible.

Damage caused by improper use is not covered by TWAUDiO.

WARNING

Before every operation, check the scope of delivery of the SBC15 swivel bracket for its completeness and ensure that all parts are in perfect condition.

WARNING

The SBC15 swivel bracket may only used with the C15 loudspeaker.

This rigging manual describes how to use the SBC15 swivel bracket correctly. Any other use shall be deemed improper and may result in damage or even injury.

Modifications or alterations to individual parts of the SBC15 swivel bracket are not permitted! Danger to life!

CAUTION

The SBC15 swivel bracket is designed both for indoor and outdoor use.

WARNING

The SBC15 swivel bracket may only be used by trained and qualified personnel. Personnel must check the SBC15 swivel bracket for suitability before each use.

WARNING

The SBC15 swivel bracket must be taken out of operation immediately as soon as visible damage to the parts can be seen.

WARNING

Please keep all elements of the SBC15 swivel bracket away from children! The small parts can easily be swallowed and lead to suffocation!

WARNING

The payload of the SBC15 swivel bracket is designed of one C15 loudspeaker. Do not exceed this payload.

WARNING

Before mounting the SBC15 swivel bracket check that e.g. ceilings, trussus and tripods are capable to carrying the payload of the components.

WARNING

Make sure that no water pipes, electrical lines or any other lines are behind the intended place of mounting.

WARNING

Only use wall plugs and screws which are suitable for the intended mounting and structural fabric. All screws must be set and tightened properly. Ensure that the fixing holes have the correct depth and diameter. Always use all fixing holes.

WARNING

When moving (assembling, dismantling, maintaining) the SBC15 swivel bracket with C15 loudspeaker, ensure sufficient space to prevent collisions with other objects.

CAUTION

Do not squeeze or twist the electrical cables of the C15 loudspeaker during the installation of the SBC15 swivel bracket! The respective national electrotechnical rules and regulations are applicable.

WARNING

All screw connections should be checked each time the SBC15 swivel bracket are installed. Tighten all loose screws. If this is no longer possible, the screws must be replaced.

2. Overview

2.1 Components

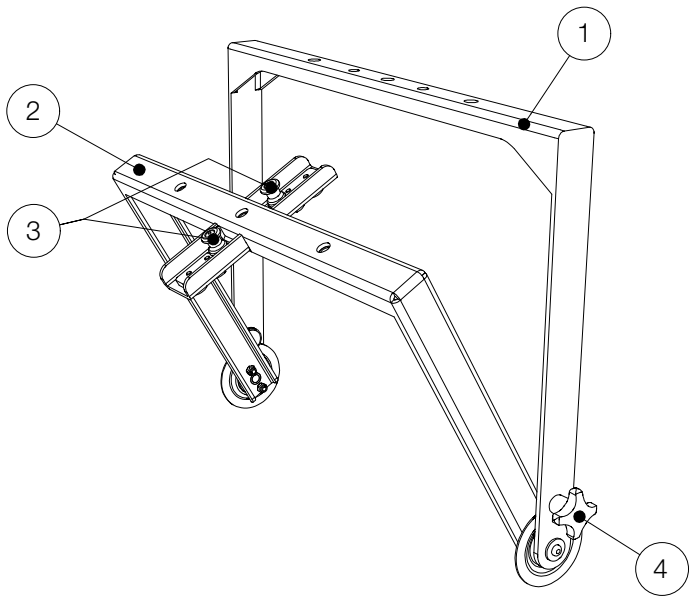

Figure 2.1 - Overview

1. Inner bracket..... 1 piece
2. Outer bracket..... 1 piece
3. Retainer..... 2 pieces
4. Cross handles..... 2 pieces

3. Technical data

3.1 Data sheet

Maximum load capacity	1x C15
Dimensions (h x w x d)	434 x 609 x 190 mm [17.09 x 23.98 x 7,48 in]
Weight	6,2 kg [13.7 lbs]
Surface	Powder-coated

4. Commissioning

4.1 Setup

The SBC15 swivel bracket is designed for the hanging and stacking operation. TW AUDiO provides a wide range of accessories to securely attach the swivel bracket.

WARNING

Please note that setting up the system setups always requires two persons!

WARNING

Make sure that all system structures are located on a firm, level surface and that the surface can bear the total weight!

NOTE

TW AUDiO recommends using only the accessories specified by TW AUDiO for securing and mounting loudspeakers.

4.2 Wind load

WARNING

Before setting up the system outdoors, consider unexpected wind conditions at the operation site!

Disassemble your system immediately when wind speeds exceed 8 bft (34 to 40 kn / 62 to 74 kph / 38.5 to 46 mph) and secure the system components!

Make sure that there are no persons in the immediate vicinity of the system structure!

WARNING

Make sure that the system structures are not operated over the audience at wind speeds in excess of 6 bft (22 to 27 kn / 39 to 49 kph / 24.2 to 30.45 mph) and that there are no persons in the immediate vicinity of the system structure!

4.3 Assembly SBC15 to loudspeaker

Depending on the application, the SBC15 swivel bracket is mounted on the bottom or top of the C15 loudspeaker. The procedure during assembly is the same.

1. Place the C15 loudspeaker upside down. Make sure to place the speaker on a clean, non-slippery surface.
2. Place the SBC15 swivel bracket with its lengthwise strut of the inner bracket on the rigging track of the C15 loudspeaker.
3. Then pull the two retainers (see figure 2.1 - pos.3) up.
4. Then snap the SBC15 swivel bracket into the rigging track of the C15 loudspeaker by releasing the two retainers again.

WARNING

5. Make sure that all retainers are always completely locked in place!

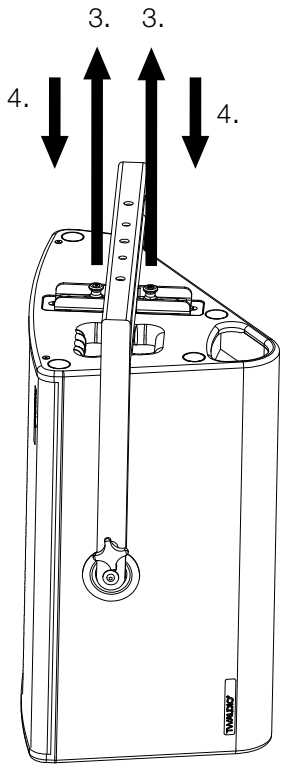

Figure 4.3 - Assembly SBC15 to C15 loudspeaker

4.4 Assembly SBC15 swivel bracket to trusses or ceiling

WARNING

Attach two DHST Doughty Halfcoupler Slimline to the outer ø13mm holes located on the crossbar of the SBC15 swivel bracket when using the SBC15 swivel bracket on trusses. Make sure that the connections are set firmly and correctly!

WARNING

For installation purposes, attach the SBC15 swivel bracket to the ceiling by using all three ø13mm holes located on the crossbar. Make sure that you use suitable fastening material and that the connections are set firmly and correctly!

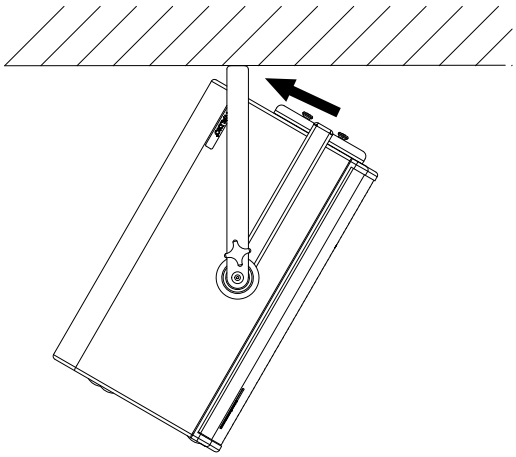

Figure 4.4 - Assembly SBC15 with C15 to ceiling

4.5 Assembly SBC15 swivel bracket on tripod

NOTE

Mount the C15 loudspeaker with SBC15 swivel bracket and the HSF pole mount flange on the tripod. Make sure that you use suitable fastening material and that the connections are set firmly and correctly!

General safety instructions for setting up on a tripod:

WARNING

For every system setup on a tripod, use a tripod that is designed according to the total weight.

WARNING

When setting up a system on uneven surfaces, such as gravel or grass, always put a pressure-resistant surface under all four spindle feet or the tripod legs! Make sure that all four spindle feet or the tripod legs rest completely on the pressure-resistant shims and that the surface can withstand the total weight!
Note that depending on the system design, either the front or rear spindle feet may be able to carry more weight!

WARNING

Make sure that no one can trip over your system structures, or over individual components! This is especially true for all pressure-resistant shims, tripod legs and bracing ropes!

WARNING

Any influences on your system setup, such as leaning against objects (or people) and flying objects around, be refrained from!

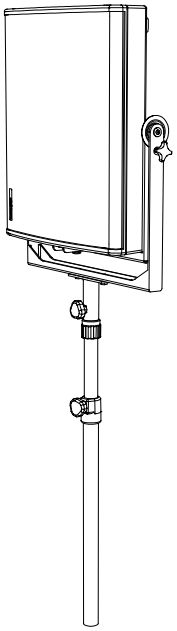

Figure 4.5 - SBC15 with C15 on tripod

5. Transport and storage

NOTE

When transporting and storing the unit, it is important to ensure that the surface of the swivel bracket are not damaged. Moisture can penetrate where steel surfaces are exposed by scratches and result in corrosion.

In addition, appreciable dust deposits may considerably impair the functionality of a loudspeaker membrane. For this reason, the loudspeakers should be transported and stored in a safe, careful, dry and largely dust-free manner.

The following spare and accessory parts for the swivel bracket are available from TW AUDiO:

- HSF (pole mount flange)
- DHST (doughty halfcoupler slimline)

The original packaging is unsuitable as permanent storage and transport packaging.

6. CE Conformity Declaration

Copy and translation of the original CE Conformity Declaration:

We hereby declare that the below-referenced components by virtue of their design and construction, and in the configuration placed on the market by us, satisfy the safety and health requirements of the applicable EC directives. This declaration becomes invalid in case of modifications that have not been approved by us.

This declaration applies to the following components

• SBC15

as well as all model variants based on these, provided that they correspond to the original factory models and have not been technically modified in any way.

Applicable directives:

• 2001/95/EG

Applicable national standards and technical specifications:

• DIN EN 18800
• DIN EN ISO 12100
• DGUV Vorschrift 17 und 18

Ludwigsburg, Germany, January 1st, 2021

Bernhard Wüstner

7. Disposal

If you have any question regarding the disposal of used devices, please contact us under the following telephone number:

+49 (0) 71 41 - 48 89 89 0

In countries outside of the European Union, comply with local regulations.

TW AUDiO INTERNATIONAL GmbH
Osterholzallee 140-2
71636 Ludwigsburg
Germany

Phone: + 49 (0) 71 41-48 89 89 0
Fax: + 49 (0) 71 41-48 89 89 99
E-Mail: info@twaudio.de
WWW: www.twaudio.de