# DMX CHARTS

**RDM Personality ID List**

| ID | DMX Mode | Footprint |
|---|---|---|
| 1 | BASIC CTC | 43 |
| 2 | STANDARD | 49 |
| 3 | ADVANCED | 48 |
| 4 | RAW | 54 |

**RDM Model ID**

0xD169

## PAN/TILT POSITION RELATED TO DMX VALUES

Pan = 0
Tilt = 0

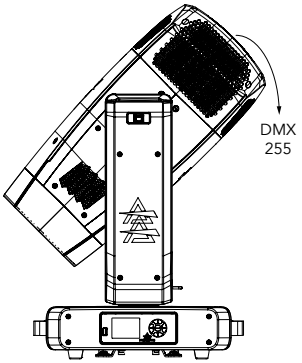


Pan = 0
Tilt = 128

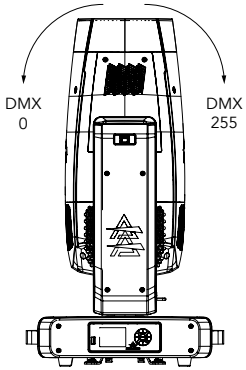


Pan = 0
Tilt = 255

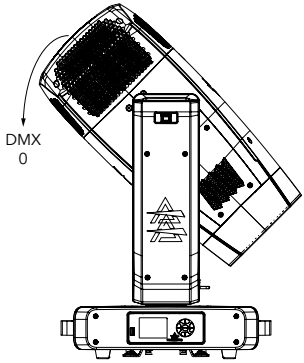


Tilt movement range: 270°
Pan movement range: 540°

Pan = 0
Tilt = 42

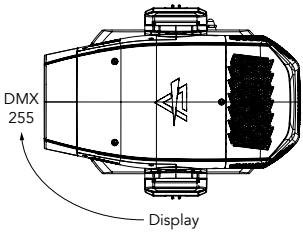


Pan = 128
Tilt = 42

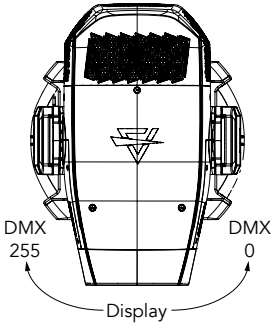


Pan = 255
Tilt = 42

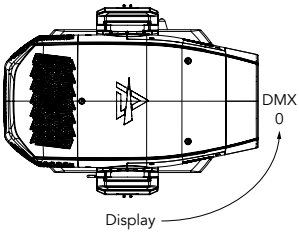

**BLADES BEHAVIOUR**

Check Below image for all the informations about the profile module

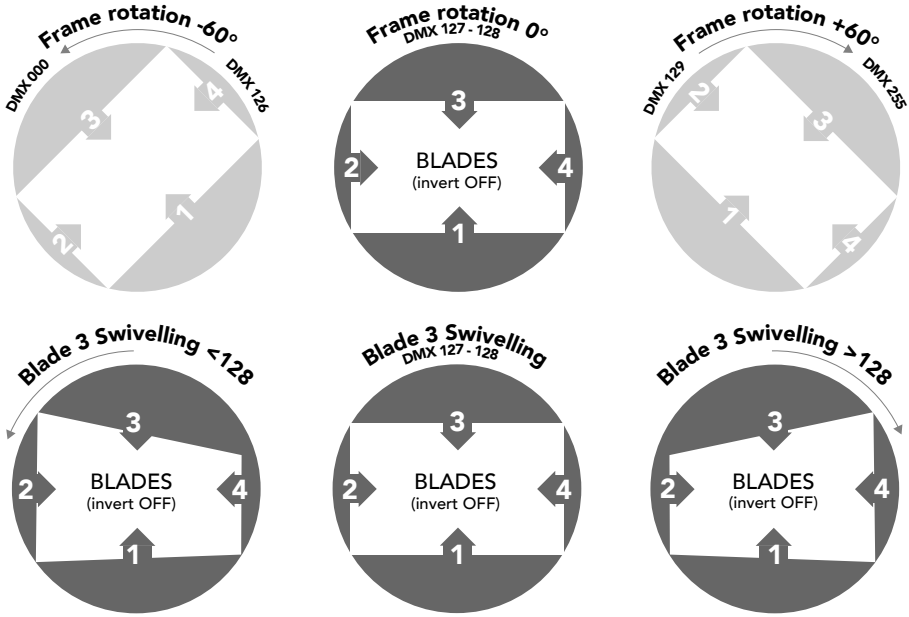


## PROJECTION ON THE WALL

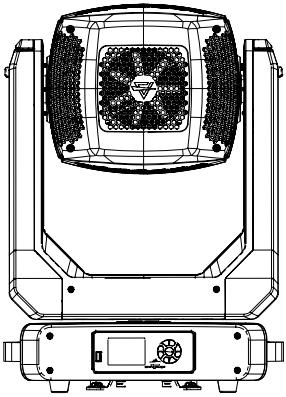

Fixture with
PAN/TILT channels @
**PAN** @50% - DMX128
**TILT** @ 84% - DMX 214

**DMX Chart Summary**

| Function | DMX MODE | | | | |
|---|---|---|---|---|---|
| | BASIC CTC | STANDARD RGB | STANDARD CMY | ADVANCED | RAW |
| | 43 | 49 | 49 | 48 | 54 |
| Pan | 1 | 1 | 1 | 1 | 1 |
| Pan fine | 2 | 2 | 2 | 2 | 2 |
| Tilt | 3 | 3 | 3 | 3 | 3 |
| Tilt fine | 4 | 4 | 4 | 4 | 4 |
| Dimmer | 5 | 5 | 5 | 5 | 5 |
| Dimmer Fine | 6 | 6 | 6 | 6 | 6 |
| Shutter | 7 | 7 | 7 | 7 | 7 |
| Cyan | - | - | 8 | - | - |
| Cyan fine | - | - | 9 | - | - |
| Magenta | - | - | 10 | - | - |
| Magenta fine | - | - | 11 | - | - |
| Yellow | - | - | 12 | - | - |
| Yellow fine | - | - | 13 | - | - |
| Red | - | 8 | - | - | 8 |
| Red fine | - | 9 | - | - | 9 |
| Green | - | 10 | - | - | 10 |
| Green fine | - | 11 | - | - | 11 |
| Blue | - | 12 | - | - | 12 |
| Blue fine | - | 13 | - | - | 13 |
| Cyan | - | - | - | - | 14 |
| Cyan fine | - | - | - | - | 15 |
| Lime | - | - | - | - | 16 |
| Lime fine | - | - | - | - | 17 |
| Amber | - | - | - | - | 18 |
| Amber fine | - | - | - | - | 19 |
| X | - | - | - | 8 | - |
| X fine | - | - | - | 9 | - |
| Y | - | - | - | 10 | - |
| Y fine | - | - | - | 11 | - |
| XFade CTC>COLOR | - | 14 | 14 | 12 | 20 |
| CCT 16 bit | 8 | 15 | 15 | 13 | 21 |
| | 9 | 16 | 16 | 14 | 22 |
| GMP | 10 | 17 | 17 | 15 | 23 |
| CRI | 11 | 18 | 18 | 16 | 24 |

**DMX Chart Summary**

| Function | DMX MODE | | | | |
|---|---|---|---|---|---|
| | BASIC CTC | STANDARD RGB | STANDARD CMY | ADVANCED | RAW |
| | **43** | **49** | **49** | **48** | **54** |
| Virtual Colors | - | 19 | 19 | - | - |
| GEL category | 12 | - | - | 17 | - |
| GEL filter | 13 | - | - | 18 | - |
| Color Wheel | 14 | 20 | 20 | 19 | 25 |
| Rot Gobo Wheel 1 | 15 | 21 | 21 | 20 | 26 |
| Gobo Rot 1 | 16 | 22 | 22 | 21 | 27 |
| Gobo Rot Fine 1 | 17 | 23 | 23 | 22 | 28 |
| Rot Gobo Wheel 2 | 18 | 24 | 24 | 23 | 29 |
| Gobo Rot 2 | 19 | 25 | 25 | 24 | 30 |
| Gobo Rot Fine 2 | 20 | 26 | 26 | 25 | 31 |
| Prism 1 | 21 | 27 | 27 | 26 | 32 |
| Prism 1 Index/Rotation | 22 | 28 | 28 | 27 | 33 |
| Frost | 23 | 29 | 29 | 28 | 34 |
| Iris | 24 | 30 | 30 | 29 | 35 |
| Iris Fine | 25 | 31 | 31 | 30 | 36 |
| Zoom | 26 | 32 | 32 | 31 | 37 |
| Zoom Fine | 27 | 33 | 33 | 32 | 38 |
| Focus | 28 | 34 | 34 | 33 | 39 |
| Focus Fine | 29 | 35 | 35 | 34 | 40 |
| Animation Insertion | 30 | 36 | 36 | 35 | 41 |
| Animation Rotation | 31 | 37 | 37 | 36 | 42 |
| Blade 1 position | 32 | 38 | 38 | 37 | 43 |
| Blade 1 swivelling | 33 | 39 | 39 | 38 | 44 |
| Blade 2 position | 34 | 40 | 40 | 39 | 45 |
| Blade 2 swivelling | 35 | 41 | 41 | 40 | 46 |
| Blade 3 position | 36 | 42 | 42 | 41 | 47 |
| Blade 3 swivelling | 37 | 43 | 43 | 42 | 48 |
| Blade 4 position | 38 | 44 | 44 | 43 | 49 |
| Blade 4 swivelling | 39 | 45 | 45 | 44 | 50 |
| Frame rotation | 40 | 46 | 46 | 45 | 51 |
| Frame macros | 41 | 47 | 47 | 46 | 52 |
| Frame macros speed | 42 | 48 | 48 | 47 | 53 |
| Control (hold 3 seconds) | 43 | 49 | 49 | 48 | 54 |

| DMX MODE | | | | | Name | Function | DMX | | Default |
|---|---|---|---|---|---|---|---|---|---|
| BASIC CTC | STANDARD RGB | STANDARD CMY | ADV | RAW | | | FROM | TO | |
| 43 | 49 | 49 | 48 | 54 | | | | | |
| 1 | 1 | 1 | 1 | 1 | Pan | Pan movement | 0 | 255 | 128 |
| 2 | 2 | 2 | 2 | 2 | Pan fine | Fine pan movement | 0 | 255 | 0 |
| 3 | 3 | 3 | 3 | 3 | Tilt | Tilt movement | 0 | 255 | 128 |
| 4 | 4 | 4 | 4 | 4 | Tilt fine | Fine tilt movement | 0 | 255 | 0 |
| 5 | 5 | 5 | 5 | 5 | Dimmer | Dimmer intensity 0 – 100% | 0 | 255 | 0 |
| 6 | 6 | 6 | 6 | 6 | Dimmer Fine | Fine dimming | 0 | 255 | 0 |
| 7 | 7 | 7 | 7 | 7 | Shutter | Open | 0 | 1 | 0 |
| | | | | | | Strobe from slow to fast | 2 | 62 | |
| | | | | | | Open | 63 | 64 | |
| | | | | | | Pulse in from slow to fast | 65 | 125 | |
| | | | | | | Close | 126 | 127 | |
| | | | | | | Pulse out from slow to fast | 128 | 188 | |
| | | | | | | Open | 189 | 190 | |
| | | | | | | Randon from slow to fast | 191 | 251 | |
| | | | | | | Open | 252 | 255 | |
| - | - | 8 | - | - | Cyan | Linear saturation 0 – 100% | 0 | 255 | 0 |
| - | - | 9 | - | - | Cyan fine | Cyan fine tuning | 0 | 255 | 0 |
| - | - | 10 | - | - | Magenta | Linear saturation 0 – 100% | 0 | 255 | 0 |
| - | - | 11 | - | - | Magenta fine | Magenta fine tuning | 0 | 255 | 0 |
| - | - | 12 | - | - | Yellow | Linear saturation 0 – 100% | 0 | 255 | 0 |
| - | - | 13 | - | - | Yellow fine | Yellow fine tuning | 0 | 255 | 0 |
| - | 8 | - | - | 8 | Red | Linear saturation 0 – 100% | 0 | 255 | 0 |
| - | 9 | - | - | 9 | Red fine | Red fine tuning | 0 | 255 | 0 |
| - | 10 | - | - | 10 | Green | Linear saturation 0 – 100% | 0 | 255 | 0 |
| - | 11 | - | - | 11 | Green fine | Green fine tuning | 0 | 255 | 0 |
| - | 12 | - | - | 12 | Blue | Linear saturation 0 – 100% | 0 | 255 | 0 |
| - | 13 | - | - | 13 | Blue fine | Blue fine tuning | 0 | 255 | 0 |
| - | - | - | - | 14 | Cyan | Linear saturation 0 – 100% | 0 | 255 | 0 |
| - | - | - | - | 15 | Cyan fine | Cyan fine tuning | 0 | 255 | 0 |
| - | - | - | - | 16 | Lime | Linear saturation 0 – 100% | 0 | 255 | 0 |
| - | - | - | - | 17 | Lime fine | Amber fine tuning | 0 | 255 | 0 |
| - | - | - | - | 18 | Amber | Linear saturation 0 – 100% | 0 | 255 | 0 |
| - | - | - | - | 19 | Amber fine | Lime fine tuning | 0 | 255 | 0 |
| - | - | - | 8 | - | X | Linear 0.000 to 0.735 | 0 | 255 | 0 |
| - | - | - | 9 | - | X fine | X fine tuning | 0 | 255 | 0 |
| - | - | - | 10 | - | Y | Linear 0.000 to 0.835 | 0 | 255 | 0 |
| - | - | - | 11 | - | Y fine | Y fine tuning | 0 | 255 | 0 |
| - | 14 | 14 | 12 | 20 | XFade CTC>COLOR | Linear Crossfade | 0 | 255 | 255 |
| 8 | 15 | 15 | 13 | 21 | CCT 16 bit | *(Check "CCT FROM 2200K TO 15000K" on page 35 )* | | | 0 |
| | | | | | | 2.200k | 0 | 0 | |
| 9 | 16 | 16 | 14 | 22 | | Linear from 2.200K to 15.000K | 1 | 254 | |
| | | | | | | 15.000k | 255 | 255 | |

| DMX MODE | | | | | Name | Function | DMX | | Default |
|---|---|---|---|---|---|---|---|---|---|
| BASIC CTC | STANDARD | | ADV | RAW | | | | | |
| | RGB | CMY | | | | | FROM | TO | |
| 43 | 49 | 49 | 48 | 54 | | | | | |
| 10 | 17 | 17 | 15 | 23 | GMP | Neutral / No Effect | 0 | 1 | 0 |
| | | | | | | Full Minus Green | 2 | 3 | |
| | | | | | | -99% to -1% | 4 | 126 | |
| | | | | | | Neutral / No Effect | 127 | 128 | |
| | | | | | | 1% to 99% | 129 | 253 | |
| | | | | | | Full Plus Green | 254 | 255 | |
| 11 | 18 | 18 | 16 | 24 | CRI | LED mode setting from menu | 0 | 1 | 0 |
| | | | | | | High Output - Lower CRI | 2 | 3 | |
| | | | | | | Linearly increase CRI | 4 | 253 | |
| | | | | | | Lower Output - High CRI | 254 | 255 | |
| - | 19 | 19 | - | - | Virtual Colors *(Check "Virtual colors" on page 38)* | No Function | 0 | 1 | 0 |
| | | | | | | Colors | 2 | 135 | |
| | | | | | | Reserved | 136 | 209 | |
| | | | | | | Whites | 210 | 253 | |
| | | | | | | Full On | 254 | 255 | |
| 12 | - | - | 17 | - | GEL category | No function | 0 | 9 | 0 |
| | | | | | | LEE: Color correction | 10 | 19 | |
| | | | | | | LEE: Color Filters | 20 | 29 | |
| | | | | | | LEE: 600 Series | 30 | 39 | |
| | | | | | | LEE: Cosmetic Filters | 40 | 49 | |
| | | | | | | LEE: 700 Series | 50 | 59 | |
| | | | | | | RC: Color correction | 60 | 69 | |
| | | | | | | RC: CalC | 70 | 79 | |
| | | | | | | RC: StSelection | 80 | 89 | |
| | | | | | | RC: C-Lux | 90 | 99 | |
| | | | | | | Blackout | 100 | 109 | |
| | | | | | | Reserved | 110 | 255 | |
| 13 | - | - | 18 | - | GEL filter | *(Check "GEL FILTERS" on page 40)* | 0 | 255 | |
| 14 | 20 | 20 | 19 | 25 | Color Wheel | **Color Positioning** | | | 0 |
| | | | | | | Open | 0 | | |
| | | | | | | Open + Dark Red | 1 | 25 | |
| | | | | | | Dark Red | 26 | | |
| | | | | | | Dark Red + Dark Green | 27 | 51 | |
| | | | | | | Dark Green | 52 | | |
| | | | | | | Dark Green + Dark Blue | 53 | 77 | |
| | | | | | | Dark Blue | 78 | | |
| | | | | | | Dark Blue + Dark Magenta | 79 | 103 | |
| | | | | | | Dark Magenta | 104 | | |
| | | | | | | Dark Magenta + Congo Blue | 105 | 129 | |
| | | | | | | Congo Blue | 130 | | |
| | | | | | | Congo Blue + Open | 131 | 155 | |
| | | | | | | Open | 156 | 159 | |

| DMX MODE | | | | | Name | Function | DMX | | Default |
|---|---|---|---|---|---|---|---|---|---|
| BASIC CTC | STANDARD | | ADV | RAW | | | | | |
| | RGB | CMY | | | | | | | |
| 43 | 49 | 49 | 48 | 54 | | | FROM | TO | |
| | | | | | | **Color Slot** | | | |
| | | | | | | Open | 160 | 165 | |
| | | | | | | Dark Red | 166 | 171 | |
| | | | | | | Dark Green | 172 | 177 | |
| | | | | | | Dark Blue | 178 | 183 | |
| 14 | 20 | 20 | 19 | 25 | Color Wheel | Dark Magenta | 184 | 189 | 0 |
| | | | | | | Congo Blue | 190 | 199 | |
| | | | | | | **Color Wheel Rotation** | | | |
| | | | | | | Forward rainbow - Fast to slow | 200 | 224 | |
| | | | | | | No rotation | 225 | 230 | |
| | | | | | | Backwards rainbow - Slow to fast | 231 | 255 | |
| | | | | | | Open | 0 | 13 | |
| | | | | | | **Gobo Indexing (set next ch)** | | | |
| | | | | | | Gobo 1 | 14 | 18 | |
| | | | | | | Gobo 2 | 19 | 23 | |
| | | | | | | Gobo 3 | 24 | 28 | |
| | | | | | | Gobo 4 | 29 | 33 | |
| | | | | | | Gobo 5 | 34 | 38 | |
| | | | | | | Gobo 6 | 39 | 43 | |
| | | | | | | **Gobo Rotation (set next ch)** | | | |
| | | | | | | Gobo 1 | 44 | 48 | |
| | | | | | | Gobo 2 | 49 | 53 | |
| | | | | | | Gobo 3 | 54 | 58 | |
| | | | | | | Gobo 4 | 59 | 63 | |
| 15 | 21 | 21 | 20 | 26 | Rot Gobo Wheel 1 | Gobo 5 | 64 | 68 | 0 |
| | | | | | | Gobo 6 | 69 | 73 | |
| | | | | | | **Gobo shaking - Slow to fast** | | | |
| | | | | | | Gobo Shake 1 | 74 | 93 | |
| | | | | | | Gobo Shake 2 | 94 | 113 | |
| | | | | | | Gobo Shake 3 | 114 | 133 | |
| | | | | | | Gobo Shake 4 | 134 | 153 | |
| | | | | | | Gobo Shake 5 | 154 | 173 | |
| | | | | | | Gobo Shake 6 | 174 | 193 | |
| | | | | | | **Gobo Wheel Rotation** | | | |
| | | | | | | Forward wheel rotation - Fast to slow | 194 | 223 | |
| | | | | | | No rotation | 224 | 225 | |
| | | | | | | Backwards wheel rotation - Slow to fast | 226 | 255 | |

| DMX MODE | | | | | Name | Function | DMX | | Default |
|---|---|---|---|---|---|---|---|---|---|
| BASIC CTC | STANDARD | | ADV | RAW | | | | | |
| | RGB | CMY | | | | | FROM | TO | |
| 43 | 49 | 49 | 48 | 54 | | | | | |
| 16 | 22 | 22 | 21 | 27 | Gobo Rot 1 | **Gobo Indexing** | | | 128 |
| | | | | | | Gobo index 0° - 360° | 0 | 255 | |
| | | | | | | **Gobo Rotation** | | | 0 |
| | | | | | | No rotation | 0 | 0 | |
| | | | | | | Forward gobo rotation - Fast to slow | 1 | 127 | |
| | | | | | | No rotation | 128 | 128 | |
| | | | | | | Backwards gobo rotation - Slow to fast | 129 | 255 | |
| 17 | 23 | 23 | 22 | 28 | Gobo Rot Fine 1 | Fine indexing/rotation | 0 | 255 | 0 |
| 18 | 24 | 24 | 23 | 29 | Rot Gobo Wheel 2 | Open | 0 | 13 | 0 |
| | | | | | | **Gobo Indexing** | | | |
| | | | | | | Gobo 1 | 14 | 18 | |
| | | | | | | Gobo 2 | 19 | 23 | |
| | | | | | | Gobo 3 | 24 | 28 | |
| | | | | | | Gobo 4 | 29 | 33 | |
| | | | | | | Gobo 5 | 34 | 38 | |
| | | | | | | Gobo 6 | 39 | 43 | |
| | | | | | | **Gobo Rotation (set next ch)** | | | |
| | | | | | | Gobo 1 | 44 | 48 | |
| | | | | | | Gobo 2 | 49 | 53 | |
| | | | | | | Gobo 3 | 54 | 58 | |
| | | | | | | Gobo 4 | 59 | 63 | |
| | | | | | | Gobo 5 | 64 | 68 | |
| | | | | | | Gobo 6 | 69 | 73 | |
| | | | | | | **Gobo Rotation (set next ch)** | | | |
| | | | | | | Gobo Shake 1 | 74 | 93 | |
| | | | | | | Gobo Shake 2 | 94 | 113 | |
| | | | | | | Gobo Shake 3 | 114 | 133 | |
| | | | | | | Gobo Shake 4 | 134 | 153 | |
| | | | | | | Gobo Shake 5 | 154 | 173 | |
| | | | | | | Gobo Shake 6 | 174 | 193 | |
| | | | | | | **Gobo Rotation (set next ch)** | | | |
| | | | | | | Forward wheel rotation - Fast to slow | 194 | 223 | |
| | | | | | | No rotation | 224 | 225 | |
| | | | | | | Backwards wheel rotation - Slow to fast | 226 | 255 | |
| 19 | 25 | 25 | 24 | 30 | Gobo Rot 2 | **Gobo Indexing** | | | 128 |
| | | | | | | Gobo index 0° - 360° | 0 | 255 | |
| | | | | | | **Gobo Rotation** | | | 0 |
| | | | | | | No rotation | 0 | 0 | |
| | | | | | | Forward gobo rotation - Fast to slow | 1 | 127 | |
| | | | | | | No rotation | 128 | 128 | |
| | | | | | | Backwards gobo rotation - Slow to fast | 129 | 255 | |

| DMX MODE | | | | | Name | Function | DMX | | Default |
|---|---|---|---|---|---|---|---|---|---|
| BASIC CTC | STANDARD | | ADV | RAW | | | | | |
| | RGB | CMY | | | | | FROM | TO | |
| 43 | 49 | 49 | 48 | 54 | | | | | |
| 20 | 26 | 26 | 25 | 31 | Gobo Rot Fine 2 | Fine indexing/rotation | 0 | 255 | 0 |
| 21 | 27 | 27 | 26 | 32 | Prism 1 | Open | 0 | 29 | 0 |
| | | | | | | Prism Indexing (set next ch) | 30 | 59 | |
| | | | | | | Prism Rotation (set next ch) | 60 | 89 | |
| | | | | | | Reserved | 90 | 255 | |
| 22 | 28 | 28 | 27 | 33 | Prism 1 Index/ Rotation | **Prism Indexing** | | | 0 |
| | | | | | | Prism Indexing | 0 | 255 | |
| | | | | | | **Prism Rotation** | | | |
| | | | | | | Prism No Rotation | 0 | 0 | |
| | | | | | | Prism forward rotation fast to slow | 1 | 127 | |
| | | | | | | Prism No Rotation | 128 | 128 | |
| | | | | | | Prism backwards rotation slow to fast | 129 | 255 | |
| 23 | 29 | 29 | 28 | 34 | Frost | Linear insertion 0 – 100% | 0 | 255 | 0 |
| 24 | 30 | 30 | 29 | 35 | Iris | Open | 0 | 0 | 0 |
| | | | | | | Max to min diameter | 1 | 127 | |
| | | | | | | Closed | 128 | 129 | |
| | | | | | | Pulse close slow to fast | 130 | 154 | |
| | | | | | | Pulse open slow to fast | 155 | 179 | |
| | | | | | | Random pulse closing slow to fast | 180 | 204 | |
| | | | | | | Random pulse opening slow to fast | 205 | 229 | |
| | | | | | | Reserved | 230 | 255 | |
| 25 | 31 | 31 | 30 | 36 | Iris Fine | Iris fine movement | 0 | 255 | 0 |
| 26 | 32 | 32 | 31 | 37 | Zoom | Zoom from min to max beam angle | 0 | 255 | 128 |
| 27 | 33 | 33 | 32 | 38 | Zoom Fine | Fine zooming | 0 | 255 | 0 |
| 28 | 34 | 34 | 33 | 39 | Focus | Focus adjustment | 0 | 255 | 128 |
| 29 | 35 | 35 | 34 | 40 | Focus Fine | Fine focusing | 0 | 255 | 0 |
| 30 | 36 | 36 | 35 | 41 | Animation Insertion | Linear insertion from 0% to 100% | 0 | 255 | 0 |
| 31 | 37 | 37 | 36 | 42 | Animation Rotation | Indexing | 0 | 127 | 0 |
| | | | | | | Forward rotation - Fast to slow | 128 | 190 | 0 |
| | | | | | | Stop | 191 | 192 | 0 |
| | | | | | | Backwards rotation - Slow to fast | 193 | 255 | 0 |
| 32 | 38 | 38 | 37 | 43 | Blade 1 position | Movement from outward to inward | 0 | 255 | 0 |
| 33 | 39 | 39 | 38 | 44 | Blade 1 swivelling | Swivelling from -25° towards 0° | 0 | 127 | 128 |
| | | | | | | 0 degrees | 128 | 128 | |
| | | | | | | Swivelling from 0° towards +25° | 129 | 255 | |
| 34 | 40 | 40 | 39 | 45 | Blade 2 position | Movement from outward to inward | 0 | 255 | 0 |
| 35 | 41 | 41 | 40 | 46 | Blade 2 swivelling | Swivelling from -25° towards 0° | 0 | 127 | 128 |
| | | | | | | 0 degrees | 128 | 128 | |
| | | | | | | Swivelling from 0° towards +25° | 129 | 255 | |

| DMX MODE | | | | | Name | Function | DMX | | Default |
|---|---|---|---|---|---|---|---|---|---|
| BASIC CTC | STANDARD | | ADV | RAW | | | | | |
| | RGB | CMY | | | | | | | |
| 43 | 49 | 49 | 48 | 54 | | | FROM | TO | |
| 36 | 42 | 42 | 41 | 47 | Blade 3 position | Movement from outward to inward | 0 | 255 | 0 |
| 37 | 43 | 43 | 42 | 48 | Blade 3 swivelling | Swivelling from -25° towards 0° | 0 | 127 | 128 |
| | | | | | | 0 degrees | 128 | 128 | |
| | | | | | | Swivelling from 0° towards +25° | 129 | 255 | |
| 38 | 44 | 44 | 43 | 49 | Blade 4 position | Movement from outward to inward | 0 | 255 | 0 |
| 39 | 45 | 45 | 44 | 50 | Blade 4 swivelling | Swivelling from -25° towards 0° | 0 | 127 | 128 |
| | | | | | | 0 degrees | 128 | 128 | |
| | | | | | | Swivelling from 0° towards +25° | 129 | 255 | |
| 40 | 46 | 46 | 45 | 51 | Frame rotation | -60 degrees to 0 degrees | 0 | 126 | 128 |
| | | | | | | 0 degrees | 127 | 128 | |
| | | | | | | 0 degrees to +60 degrees | 129 | 255 | |
| 41 | 47 | 47 | 46 | 52 | Frame macros | No Function | 0 | 3 | 0 |
| | | | | | | Macro 1 | 4 | 10 | |
| | | | | | | Macro 2 | 11 | 17 | |
| | | | | | | Macro 3 | 18 | 24 | |
| | | | | | | Macro 4 | 25 | 31 | |
| | | | | | | Macro 5 | 32 | 38 | |
| | | | | | | Macro 6 | 39 | 45 | |
| | | | | | | Macro 7 | 46 | 52 | |
| | | | | | | Macro 8 | 53 | 59 | |
| | | | | | | Macro 9 | 60 | 66 | |
| | | | | | | Macro 10 | 67 | 73 | |
| | | | | | | Macro 11 | 74 | 80 | |
| | | | | | | Macro 12 | 81 | 87 | |
| | | | | | | Macro 13 | 88 | 94 | |
| | | | | | | Macro 14 | 95 | 101 | |
| | | | | | | Macro 15 | 102 | 108 | |
| | | | | | | Macro 16 | 109 | 115 | |
| | | | | | | Macro 17 | 116 | 122 | |
| | | | | | | Macro 18 | 123 | 129 | |
| | | | | | | Macro 19 | 130 | 136 | |
| | | | | | | Macro 20 | 137 | 143 | |
| | | | | | | Macro 21 | 144 | 150 | |
| | | | | | | Macro 22 | 151 | 157 | |
| | | | | | | Macro 23 | 158 | 164 | |
| | | | | | | Macro 24 | 165 | 171 | |
| | | | | | | Macro 25 | 172 | 178 | |
| | | | | | | Macro 26 | 179 | 185 | |
| | | | | | | Macro 27 | 186 | 192 | |
| | | | | | | Macro 28 | 193 | 199 | |

| DMX MODE | | | | | Name | Function | DMX | | Default |
|---|---|---|---|---|---|---|---|---|---|
| BASIC CTC | STANDARD | | ADV | RAW | | | | | |
| | RGB | CMY | | | | | FROM | TO | |
| **43** | **49** | **49** | **48** | **54** | | | | | |
| 41 | 47 | 47 | 46 | 52 | Frame macros | Macro 29 | 200 | 206 | 0 |
| | | | | | | Macro 30 | 207 | 213 | |
| | | | | | | Macro 31 | 214 | 220 | |
| | | | | | | Macro 32 | 221 | 227 | |
| | | | | | | Macro 33 | 228 | 234 | |
| | | | | | | Macro 34 | 235 | 241 | |
| | | | | | | Macro 35 | 242 | 248 | |
| | | | | | | Macro 36 | 249 | 255 | |
| 42 | 48 | 48 | 47 | 53 | Frame macros speed | Lineary from 0 to 100% | 0 | 255 | 0 |
| 43 | 49 | 49 | 48 | 54 | Control | No Function/Safe | 0 | 1 | 0 |
| | | | | | | *(See full list Check "Control Channel" on page 45)* | 2 | 251 | |
| | | | | | | Factory default of control functions | 252 | 253 | |
| | | | | | | Reserved | 254 | 255 | |

CCT FROM 2200K TO 15000K

| CCT from | CCT to | 8 bit value | | 16 bit value | | Note |
|---|---|---|---|---|---|---|
| | | From | To | From | To | |
| 2200 | 2300 | 0 | 2 | 0 | 767 | Default @ 0 |
| 2300 | 2400 | 2 | 4 | 512 | 1279 | |
| 2400 | 2500 | 4 | 6 | 1024 | 1791 | |
| 2500 | 2600 | 6 | 8 | 1536 | 2303 | |
| 2600 | 2700 | 8 | 10 | 2048 | 2815 | |
| 2700 | 2800 | 10 | 12 | 2560 | 3327 | |
| 2800 | 2900 | 12 | 14 | 3072 | 3839 | |
| 2900 | 3000 | 14 | 16 | 3584 | 4351 | |
| 3000 | 3100 | 16 | 18 | 4096 | 4863 | |
| 3100 | 3200 | 18 | 20 | 4608 | 5375 | |
| 3200 | 3300 | 20 | 22 | 5120 | 5887 | |
| 3300 | 3400 | 22 | 24 | 5632 | 6399 | |
| 3400 | 3500 | 24 | 26 | 6144 | 6911 | |
| 3500 | 3600 | 26 | 28 | 6656 | 7423 | |
| 3600 | 3700 | 28 | 30 | 7168 | 7935 | |
| 3700 | 3800 | 30 | 32 | 7680 | 8447 | |
| 3800 | 3900 | 32 | 34 | 8192 | 8959 | |
| 3900 | 4000 | 34 | 36 | 8704 | 9471 | |
| 4000 | 4100 | 36 | 38 | 9216 | 9983 | |
| 4100 | 4200 | 38 | 40 | 9728 | 10495 | |
| 4200 | 4300 | 40 | 42 | 10240 | 11007 | |
| 4300 | 4400 | 42 | 44 | 10752 | 11519 | |
| 4400 | 4500 | 44 | 46 | 11264 | 12031 | |
| 4500 | 4600 | 46 | 48 | 11776 | 12543 | |
| 4600 | 4700 | 48 | 50 | 12288 | 13055 | |
| 4700 | 4800 | 50 | 52 | 12800 | 13567 | |
| 4800 | 4900 | 52 | 54 | 13312 | 14079 | |
| 4900 | 5000 | 54 | 56 | 13824 | 14591 | |
| 5000 | 5100 | 56 | 58 | 14336 | 15103 | |
| 5100 | 5200 | 58 | 60 | 14848 | 15615 | |
| 5200 | 5300 | 60 | 62 | 15360 | 16127 | |
| 5300 | 5400 | 62 | 64 | 15872 | 16639 | |
| 5400 | 5500 | 64 | 66 | 16384 | 17151 | |
| 5500 | 5600 | 66 | 68 | 16896 | 17663 | |
| 5600 | 5700 | 68 | 70 | 17408 | 18175 | |
| 5700 | 5800 | 70 | 72 | 17920 | 18687 | |
| 5800 | 5900 | 72 | 74 | 18432 | 19199 | |
| 5900 | 6000 | 74 | 76 | 18944 | 19711 | |
| 6000 | 6100 | 76 | 78 | 19456 | 20223 | |
| 6100 | 6200 | 78 | 80 | 19968 | 20735 | |
| 6200 | 6300 | 80 | 82 | 20480 | 21247 | |
| 6300 | 6400 | 82 | 84 | 20992 | 21759 | |
| 6400 | 6500 | 84 | 86 | 21504 | 22271 | |
| 6500 | 6600 | 86 | 88 | 22016 | 22783 | |
| 6600 | 6700 | 88 | 90 | 22528 | 23295 | |
| 6700 | 6800 | 90 | 92 | 23040 | 23807 | |
| 6800 | 6900 | 92 | 94 | 23552 | 24319 | |
| 6900 | 7000 | 94 | 96 | 24064 | 24831 | |
| 7000 | 7100 | 96 | 98 | 24576 | 25343 | |
| 7100 | 7200 | 98 | 100 | 25088 | 25855 | |

CCT FROM 2200K TO 15000K

| CCT from | CCT to | 8 bit value | | 16 bit value | | Note |
|---|---|---|---|---|---|---|
| | | From | To | From | To | |
| 7200 | 7300 | 100 | 102 | 25600 | 26367 | Default @ 0 |
| 7300 | 7400 | 102 | 104 | 26112 | 26879 | |
| 7400 | 7500 | 104 | 106 | 26624 | 27391 | |
| 7500 | 7600 | 106 | 108 | 27136 | 27903 | |
| 7600 | 7700 | 108 | 110 | 27648 | 28415 | |
| 7700 | 7800 | 110 | 112 | 28160 | 28927 | |
| 7800 | 7900 | 112 | 114 | 28672 | 29439 | |
| 7900 | 8000 | 114 | 116 | 29184 | 29951 | |
| 8000 | 8100 | 116 | 118 | 29696 | 30463 | |
| 8100 | 8200 | 118 | 120 | 30208 | 30975 | |
| 8200 | 8300 | 120 | 122 | 30720 | 31487 | |
| 8300 | 8400 | 122 | 124 | 31232 | 31999 | |
| 8400 | 8500 | 124 | 126 | 31744 | 32511 | |
| 8500 | 8600 | 126 | 128 | 32256 | 33023 | |
| 8600 | 8700 | 128 | 129 | 32768 | 33279 | |
| 8700 | 8800 | 129 | 131 | 33024 | 33791 | |
| 8800 | 8900 | 131 | 133 | 33536 | 34303 | |
| 8900 | 9000 | 133 | 135 | 34048 | 34815 | |
| 9000 | 9100 | 135 | 137 | 34560 | 35327 | |
| 9100 | 9200 | 137 | 139 | 35072 | 35839 | |
| 9200 | 9300 | 139 | 141 | 35584 | 36351 | |
| 9300 | 9400 | 141 | 143 | 36096 | 36863 | |
| 9400 | 9500 | 143 | 145 | 36608 | 37375 | |
| 9500 | 9600 | 145 | 147 | 37120 | 37887 | |
| 9600 | 9700 | 147 | 149 | 37632 | 38399 | |
| 9700 | 9800 | 149 | 151 | 38144 | 38911 | |
| 9800 | 9900 | 151 | 153 | 38656 | 39423 | |
| 9900 | 10000 | 153 | 155 | 39168 | 39935 | |
| 10000 | 10100 | 155 | 157 | 39680 | 40447 | |
| 10100 | 10200 | 157 | 159 | 40192 | 40959 | |
| 10200 | 10300 | 159 | 161 | 40704 | 41471 | |
| 10300 | 10400 | 161 | 163 | 41216 | 41983 | |
| 10400 | 10500 | 163 | 165 | 41728 | 42495 | |
| 10500 | 10600 | 165 | 167 | 42240 | 43007 | |
| 10600 | 10700 | 167 | 169 | 42752 | 43519 | |
| 10700 | 10800 | 169 | 171 | 43264 | 44031 | |
| 10800 | 10900 | 171 | 173 | 43776 | 44543 | |
| 10900 | 11000 | 173 | 175 | 44288 | 45055 | |
| 11000 | 11100 | 175 | 177 | 44800 | 45567 | |
| 11100 | 11200 | 177 | 179 | 45312 | 46079 | |
| 11200 | 11300 | 179 | 181 | 45824 | 46591 | |
| 11300 | 11400 | 181 | 183 | 46336 | 47103 | |
| 11400 | 11500 | 183 | 185 | 46848 | 47615 | |
| 11500 | 11600 | 185 | 187 | 47360 | 48127 | |
| 11600 | 11700 | 187 | 189 | 47872 | 48639 | |
| 11700 | 11800 | 189 | 191 | 48384 | 49151 | |
| 11800 | 11900 | 191 | 193 | 48896 | 49663 | |
| 11900 | 12000 | 193 | 195 | 49408 | 50175 | |
| 12000 | 12100 | 195 | 197 | 49920 | 50687 | |
| 12100 | 12200 | 197 | 199 | 50432 | 51199 | |

CCT FROM 2200K TO 15000K

| CCT from | CCT to | 8 bit value | | 16 bit value | | Note |
|---|---|---|---|---|---|---|
| | | From | To | From | To | |
| 12200 | 12300 | 199 | 201 | 50944 | 51711 | Default @ 0 |
| 12300 | 12400 | 201 | 203 | 51456 | 52223 | |
| 12400 | 12500 | 203 | 205 | 51968 | 52735 | |
| 12500 | 12600 | 205 | 207 | 52480 | 53247 | |
| 12600 | 12700 | 207 | 209 | 52992 | 53759 | |
| 12700 | 12800 | 209 | 211 | 53504 | 54271 | |
| 12800 | 12900 | 211 | 213 | 54016 | 54783 | |
| 12900 | 13000 | 213 | 215 | 54528 | 55295 | |
| 13000 | 13100 | 215 | 217 | 55040 | 55807 | |
| 13100 | 13200 | 217 | 219 | 55552 | 56319 | |
| 13200 | 13300 | 219 | 221 | 56064 | 56831 | |
| 13300 | 13400 | 221 | 223 | 56576 | 57343 | |
| 13400 | 13500 | 223 | 225 | 57088 | 57855 | |
| 13500 | 13600 | 225 | 227 | 57600 | 58367 | |
| 13600 | 13700 | 227 | 229 | 58112 | 58879 | |
| 13700 | 13800 | 229 | 231 | 58624 | 59391 | |
| 13800 | 13900 | 231 | 233 | 59136 | 59903 | |
| 13900 | 14000 | 233 | 235 | 59648 | 60415 | |
| 14000 | 14100 | 235 | 237 | 60160 | 60927 | |
| 14100 | 14200 | 237 | 239 | 60672 | 61439 | |
| 14200 | 14300 | 239 | 241 | 61184 | 61951 | |
| 14300 | 14400 | 241 | 243 | 61696 | 62463 | |
| 14400 | 14500 | 243 | 245 | 62208 | 62975 | |
| 14500 | 14600 | 245 | 247 | 62720 | 63487 | |
| 14600 | 14700 | 247 | 249 | 63232 | 63999 | |
| 14700 | 14800 | 249 | 251 | 63744 | 64511 | |
| 14800 | 14900 | 251 | 253 | 64256 | 65023 | |
| 14900 | 15000 | 253 | 255 | 64768 | 65535 | |

Virtual colors

| Function | 8 bit value | | 16 bit value | | Note |
|---|---|---|---|---|---|
| | From | To | From | To | |
| No Function | 0 | 1 | - | - | Default @ 0 |
| Red | 2 | 3 | - | - | |
| Green | 4 | 5 | - | - | |
| Blue | 6 | 7 | - | - | |
| Cyan | 8 | 9 | - | - | |
| Magenta | 10 | 11 | - | - | |
| Yellow | 12 | 13 | - | - | |
| Dirty White | 14 | 15 | - | - | |
| Alice Bllue | 16 | 17 | - | - | |
| Congo Blue | 18 | 19 | - | - | |
| Dark Steel Blue | 20 | 21 | - | - | |
| Deep Lavender | 22 | 23 | - | - | |
| Lilac Ting | 24 | 25 | - | - | |
| Daylight Blue | 26 | 27 | - | - | |
| Flame Red | 28 | 29 | - | - | |
| Bastard Amber | 30 | 31 | - | - | |
| Deep Orange | 32 | 33 | - | - | |
| Pale Gold | 34 | 35 | - | - | |
| Apricot | 36 | 37 | - | - | |
| Bright Blue | 38 | 39 | - | - | |
| Primary Green | 40 | 41 | - | - | |
| Special Lavender | 42 | 43 | - | - | |
| Pale Lavender | 44 | 45 | - | - | |
| Deep Golden Amber | 46 | 47 | - | - | |
| Medium Blue | 48 | 49 | - | - | |
| Bright Pink | 50 | 51 | - | - | |
| Mauve | 52 | 53 | - | - | |
| Dark Green | 54 | 55 | - | - | |
| Lee Green | 56 | 57 | - | - | |
| Dark Blue | 58 | 59 | - | - | |
| Light Blue | 60 | 61 | - | - | |
| Steel Blue | 62 | 63 | - | - | |
| Medium Blue-Green | 64 | 65 | - | - | |
| Peacock Blue | 66 | 67 | - | - | |
| Magenta | 68 | 69 | - | - | |
| Dark Pink | 70 | 71 | - | - | |
| Middle Rose | 72 | 73 | - | - | |
| Light Salmon | 74 | 75 | - | - | |
| English Rose | 76 | 77 | - | - | |
| Light Rose | 78 | 79 | - | - | |
| Orange | 80 | 81 | - | - | |
| Deep Amber | 82 | 83 | - | - | |
| Straw | 84 | 85 | - | - | |
| Light Amber | 86 | 87 | - | - | |
| Spring Yellow | 88 | 89 | - | - | |
| Dark Yellow Green | 90 | 91 | - | - | |
| Just Blue | 92 | 93 | - | - | |
| Sky Blue | 94 | 95 | - | - | |
| Lavender | 96 | 97 | - | - | |
| Light Lavender | 98 | 99 | - | - | |

**Virtual colors**

| Function | 8 bit value | | 16 bit value | | Note |
|---|---|---|---|---|---|
| | From | To | From | To | |
| Pink Carnation | 100 | 101 | - | - | Default @ 0 |
| Medium Pink | 102 | 103 | - | - | |
| Light Pink | 104 | 105 | - | - | |
| Sunset Red | 106 | 107 | - | - | |
| Dark Amber | 108 | 109 | - | - | |
| Gold Amber | 110 | 111 | - | - | |
| Medium Amber | 112 | 113 | - | - | |
| Fire | 114 | 115 | - | - | |
| Surprise Peach | 116 | 117 | - | - | |
| Straw Tint | 118 | 119 | - | - | |
| Medium Yellow | 120 | 121 | - | - | |
| Lee Minus Green | 122 | 123 | - | - | |
| Pale Gold | 124 | 125 | - | - | |
| Orange | 126 | 127 | - | - | |
| Deep Straw | 128 | 129 | - | - | |
| Rose Purple | 130 | 131 | - | - | |
| Deep Purple | 132 | 133 | - | - | |
| Soft Green | 134 | 135 | - | - | |
| Reserved For Future Use | 136 | 209 | - | - | |
| 2700K | 210 | 211 | - | - | |
| 2800K | 212 | 213 | - | - | |
| 3000K | 214 | 215 | - | - | |
| 3200K | 216 | 217 | - | - | |
| 3400K | 218 | 219 | - | - | |
| 3600K | 220 | 221 | - | - | |
| 3800K | 222 | 223 | - | - | |
| 4000K | 224 | 225 | - | - | |
| 4200K | 226 | 227 | - | - | |
| 4400K | 228 | 229 | - | - | |
| 4600K | 230 | 231 | - | - | |
| 4800K | 232 | 233 | - | - | |
| 5000K | 234 | 235 | - | - | |
| 5200K | 236 | 237 | - | - | |
| 5400K | 238 | 239 | - | - | |
| 5600K | 240 | 241 | - | - | |
| 6000K | 242 | 243 | - | - | |
| 6500K | 244 | 245 | - | - | |
| 7000K | 246 | 247 | - | - | |
| 8000K | 248 | 249 | - | - | |
| 9000K | 250 | 251 | - | - | |
| 10000K | 252 | 253 | - | - | |
| Full On | 254 | 255 | - | - | |

**Category | Lee: Color Correction**

| Function | 8 bit value | | Gel # |
|---|---|---|---|
| Gel Name | From | To | |
| Double CTB | 0 | 1 | 200 |
| Full CTB | 2 | 3 | 201 |
| 3/4 CTB | 4 | 5 | 281 |
| 1/2 CTB | 6 | 7 | 202 |
| 1/4 CTB | 8 | 9 | 203 |
| 1/8 CTB | 10 | 11 | 218 |
| Double CTO | 12 | 13 | 287 |
| Full CTO | 14 | 15 | 204 |
| 3/4 CTO | 16 | 17 | 285 |
| 1/2 CTO | 18 | 19 | 205 |
| 1/4 CTO | 20 | 21 | 206 |
| 1/8 CTO | 22 | 23 | 223 |
| 1 1/2 CTB | 24 | 25 | 283 |
| 1 1/2 CTO | 26 | 27 | 286 |
| Full CTS | 28 | 29 | 441 |
| 1/2 CTS | 30 | 31 | 442 |
| 1/4 CTS | 32 | 33 | 443 |
| 1/8 CTS | 34 | 35 | 444 |
| Full CTO + .3 ND | 36 | 37 | 207 |
| Full CTO + .6 ND | 38 | 39 | 208 |
| L.C.T. Yellow (Y1) | 40 | 41 | 212 |
| White Flame Green | 42 | 43 | 213 |
| LEE Fluorescent Green | 44 | 45 | 219 |
| Super Correction L.C.T. Yellow | 46 | 47 | 230 |
| Super Correction W.F. Green | 48 | 49 | 232 |
| H.M.I. (to Tungsten) | 50 | 51 | 236 |
| C.I.D. (to Tungsten) | 52 | 53 | 237 |
| C.S.I. (to Tungsten) | 54 | 55 | 238 |
| LEE Fluorescent 5700 Kelvin | 56 | 57 | 241 |
| LEE Fluorescent 4300 Kelvin | 58 | 59 | 242 |
| LEE Fluorescent 3600 Kelvin | 60 | 61 | 243 |
| LEE Plus Green | 62 | 63 | 244 |
| 1/2 Plus Green | 64 | 65 | 245 |
| 1/4 Plus Green | 66 | 67 | 246 |
| 1/8 Plus Green | 68 | 69 | 278 |
| Lee Minus Green | 70 | 71 | 247 |
| 1/2 Minus Green | 72 | 73 | 248 |
| 1/4 Minus Green | 74 | 75 | 249 |
| 1/8 Minus Green | 76 | 77 | 279 |
| Reserved for Future Use | 78 | 255 | - |

### Category | Lee: Color Filters

| Function | 8 bit value | | Gel # |
|---|---|---|---|
| Gel Name | From | To | |
| Rose Pink | 0 | 1 | 2 |
| Lavender Tint | 2 | 3 | 3 |
| Medium Bastard Amber | 4 | 5 | 4 |
| Pale Yellow | 6 | 7 | 7 |
| Dark Salmon | 8 | 9 | 8 |
| Pale Amber Gold | 10 | 11 | 9 |
| Medium Yellow | 12 | 13 | 10 |
| Straw Tint | 14 | 15 | 13 |
| Surprise Peach | 16 | 17 | 17 |
| Fire | 18 | 19 | 19 |
| Medium Amber | 20 | 21 | 20 |
| Gold Amber | 22 | 23 | 21 |
| Dark Amber | 24 | 25 | 22 |
| Scarlet | 26 | 27 | 24 |
| Sunset Red | 28 | 29 | 25 |
| Bright Red | 30 | 31 | 26 |
| Light Pink | 32 | 33 | 35 |
| Medium Pink | 34 | 35 | 36 |
| Dark Magenta | 36 | 37 | 46 |
| Rose Purple | 38 | 39 | 48 |
| Light Lavender | 40 | 41 | 52 |
| Paler Lavender | 42 | 43 | 53 |
| Lavender | 44 | 45 | 58 |
| Mist Blue | 46 | 47 | 61 |
| Pale Blue | 48 | 49 | 63 |
| Sky Blue | 50 | 51 | 68 |
| Evening Blue | 52 | 53 | 75 |
| Just Blue | 54 | 55 | 79 |
| Deeper Blue | 56 | 57 | 85 |
| Lime Green | 58 | 59 | 88 |
| Moss Green | 60 | 61 | 89 |
| Dark Yellow Green | 62 | 63 | 90 |
| Spring Yellow | 64 | 65 | 100 |
| Yellow | 66 | 67 | 101 |
| Light Amber | 68 | 69 | 102 |
| Straw | 70 | 71 | 103 |
| Deep Amber | 72 | 73 | 104 |
| Primary Red | 74 | 75 | 106 |
| Light Rose | 76 | 77 | 107 |
| English Rose | 78 | 79 | 108 |
| Light Salmon | 80 | 81 | 109 |
| Middle Rose | 82 | 83 | 110 |
| Dark Pink | 84 | 85 | 111 |
| Magenta | 86 | 87 | 113 |
| Peacock Blue | 88 | 89 | 115 |

### Category | Lee: Color Filters

| Function | 8 bit value | | Gel # |
|---|---|---|---|
| Gel Name | From | To | |
| Steel Blue | 90 | 91 | 117 |
| Light Blue | 92 | 93 | 118 |
| Deep Blue | 94 | 95 | 120 |
| LEE Green | 96 | 97 | 121 |
| Fern Green | 98 | 99 | 122 |
| Dark Green | 100 | 101 | 124 |
| Smokey Pink | 102 | 103 | 127 |
| Bright Pink | 104 | 105 | 128 |
| Marine Blue | 106 | 107 | 131 |
| Golden Amber | 108 | 109 | 134 |
| Deep Golden Amber | 110 | 111 | 135 |
| Pale Lavender | 112 | 113 | 136 |
| Special Lavender | 114 | 115 | 137 |
| Pale Green | 116 | 117 | 138 |
| Summer Blue | 118 | 119 | 140 |
| Pale Violet | 120 | 121 | 142 |
| Pale Navy Blue | 122 | 123 | 143 |
| No Color Blue | 124 | 125 | 144 |
| Apricot | 126 | 127 | 147 |
| Bright Rose | 128 | 129 | 148 |
| Gold Tint | 130 | 131 | 151 |
| Pale Gold | 132 | 133 | 152 |
| Pale Salmon | 134 | 135 | 153 |
| Pale Rose | 136 | 137 | 154 |
| Chocolate | 138 | 139 | 156 |
| Pink | 140 | 141 | 157 |
| No Color Straw | 142 | 143 | 159 |
| Slate Blue | 144 | 145 | 161 |
| Bastard Amber | 146 | 147 | 162 |
| Flame Red | 148 | 149 | 164 |
| Daylight Blue | 150 | 151 | 165 |
| Lilac Tint | 152 | 153 | 169 |
| Deep Lavender | 154 | 155 | 170 |
| Dark Steel Blue | 156 | 157 | 174 |
| Loving Amber | 158 | 159 | 176 |
| Dark Lavender | 160 | 161 | 180 |
| Light Red | 162 | 163 | 182 |
| Flesh Pink | 164 | 165 | 192 |
| Surprise Pink | 166 | 167 | 194 |
| Zenith Blue | 168 | 169 | 195 |
| True Blue | 170 | 171 | 196 |
| Alice Blue | 172 | 173 | 197 |
| Palace Blue | 174 | 175 | 198 |
| Regal Blue | 176 | 177 | 199 |
| Reserved for Future Use | 178 | 255 | - |

**Category | Lee: 600 Series**

| Function | 8 bit value | | Gel # |
|---|---|---|---|
| **Gel Name** | **From** | **To** | |
| Arctic White | 0 | 1 | 600 |
| Silver | 2 | 3 | 601 |
| Platinum | 4 | 5 | 602 |
| Moonlight White | 6 | 7 | 603 |
| Full CT 85 | 8 | 9 | 604 |
| Industry Sodium | 10 | 11 | 650 |
| HI Sodium | 12 | 13 | 651 |
| Urban Sodium | 14 | 15 | 652 |
| LO Sodium | 16 | 17 | 653 |
| Reserved | 18 | 255 | - |

**Category | Lee: Cosmetic Filters**

| Function | 8 bit value | | Gel # |
|---|---|---|---|
| **Gel Name** | **From** | **To** | |
| Cosmetic Peach | 0 | 1 | 184 |
| Cosmetic Silver Rose | 2 | 3 | 186 |
| Cosmetic Rouge | 4 | 5 | 187 |
| Cosmetic Highlight | 6 | 7 | 188 |
| Cosmetic Silver Moss | 8 | 9 | 189 |
| Cosmetic Aqua Blue | 10 | 11 | 191 |
| Lily Frost | 12 | 13 | 705 |
| Shanklin Frost | 14 | 15 | 717 |
| Half Shanklin Frost | 16 | 17 | 718 |
| Durham Daylight Frost | 18 | 19 | 720 |
| Hampshire Rose | 20 | 21 | 749 |
| Durham Frost | 22 | 23 | 750 |
| Soft Amber Key 1 | 24 | 25 | 774 |
| Soft Amber Key 2 | 26 | 27 | 775 |
| Moroccan Frost | 28 | 29 | 791 |
| Blue Diffusion | 30 | 31 | 217 |
| Blue Frost | 32 | 33 | 221 |
| Daylight Blue Frost | 34 | 35 | 224 |
| Reserved for Future Use | 36 | 255 | - |

### Category | Lee: 700 Series

| Function | 8 bit value | | Gel # |
|---|---|---|---|
| Gel Name | From | To | |
| Perfect Lavender | 0 | 1 | 700 |
| Provence | 2 | 3 | 701 |
| Special Pale Lavender | 4 | 5 | 702 |
| Cold Lavender | 6 | 7 | 703 |
| Lily | 8 | 9 | 704 |
| King Fals Lavender | 10 | 11 | 706 |
| Cool Lavender | 12 | 13 | 708 |
| Electric Lilac | 14 | 15 | 709 |
| Spir Special Blue | 16 | 17 | 710 |
| Cold Blue | 18 | 19 | 711 |
| Bedford Blue | 20 | 21 | 712 |
| Elysian Blue | 22 | 23 | 714 |
| Cabana Blue | 24 | 25 | 715 |
| Mikkel Blue | 26 | 27 | 716 |
| Colour Wash Blue | 28 | 29 | 719 |
| Berry Blue | 30 | 31 | 721 |
| Virgin Blue | 32 | 33 | 723 |
| Ocean Blue | 34 | 35 | 724 |
| Old Steel Blue | 36 | 37 | 725 |
| Steel Green | 38 | 39 | 728 |
| Liberty Green | 40 | 41 | 730 |
| Dirty Ice | 42 | 43 | 731 |
| Damp Squib | 44 | 45 | 733 |
| JAS Green | 46 | 47 | 738 |
| Bram Brown | 48 | 49 | 742 |
| Dirty White | 50 | 51 | 744 |
| Brown | 52 | 53 | 746 |
| Easy White | 54 | 55 | 747 |
| Seedy Pink | 56 | 57 | 748 |
| Wheat | 58 | 59 | 763 |
| Sun Colour Straw | 60 | 61 | 764 |
| LEE Yellow | 62 | 63 | 765 |
| Cardbox Amber | 64 | 65 | 773 |
| Nectarine | 66 | 67 | 776 |
| Millenium Gold | 68 | 69 | 778 |
| Bastard Pink | 70 | 71 | 779 |
| Terry Red | 72 | 73 | 781 |
| Blood Red | 74 | 75 | 789 |
| Moroccan Pink | 76 | 77 | 790 |
| Pretty n'Pink | 78 | 79 | 794 |
| Magical Magenta | 80 | 81 | 795 |
| Reserved for Future Use | 82 | 255 | - |

### Category | Rc: Color Correction

| Function | 8 bit value | | Gel # |
|---|---|---|---|
| Gel Name | From | To | |
| Full CTB | 0 | 1 | 3202 |
| 3/4 CTB | 2 | 3 | 3203 |
| 1/2 CTB | 4 | 5 | 3204 |
| 1/3 CTB | 6 | 7 | 3206 |
| 1/4 CTB | 8 | 9 | 3208 |
| 1/8 CTB | 10 | 11 | 3216 |
| Double CTB | 12 | 13 | 3220 |
| Full CTO | 14 | 15 | 3407 |
| 3/4 CTO | 16 | 17 | 3411 |
| 1/2 CTO | 18 | 19 | 3408 |
| 1/4 CTO | 20 | 21 | 3409 |
| 1/8 CTO | 22 | 23 | 3410 |
| Double CTO | 24 | 25 | 3420 |
| Full CTS | 26 | 27 | 3441 |
| 1/2 CTS | 28 | 29 | 3442 |
| 1/4 CTS | 30 | 31 | 3443 |
| 1/8 CTS | 32 | 33 | 3444 |
| Full Plusgreen | 34 | 35 | 3304 |
| 1/2 Plusgreen | 36 | 37 | 3315 |
| 1/4 Plusgreen | 38 | 39 | 3316 |
| 1/8 Plusgreen | 40 | 41 | 3317 |
| Full Minusgreen | 42 | 43 | 3308 |
| 3/4 Minusgreen | 44 | 45 | 3309 |
| 1/2 Minusgreen | 46 | 47 | 3313 |
| 1/4 Minusgreen | 48 | 49 | 3314 |
| 1/8 Minusgreen | 50 | 51 | 3318 |
| Fluorofilter | 52 | 53 | 3310 |
| Industrial Vapor | 54 | 55 | 3150 |
| Urban Vapor | 56 | 57 | 3152 |
| Tough Y-1 | 58 | 59 | 3107 |
| Tough MT 54 | 60 | 61 | 3134 |
| Tough MTY | 62 | 63 | 3106 |
| Tough MT2 | 64 | 65 | 3102 |
| Reserved for Future Use | 66 | 255 | - |

### Category | Rc: CalC

| Function | 8 bit value | | Gel # |
|---|---|---|---|
| Gel Name | From | To | |
| 15 Blue | 0 | 1 | 4215 |
| 30 Blue | 2 | 3 | 4230 |
| 60 Blue | 4 | 5 | 4260 |
| 90 Blue | 6 | 7 | 4290 |
| 7 Cyan | 8 | 9 | 4307 |
| 15 Cyan | 10 | 11 | 4315 |
| 30 Cyan | 12 | 13 | 4330 |
| 60 Cyan | 14 | 15 | 4360 |
| 90 Cyan | 16 | 17 | 4390 |
| 15 Green | 18 | 19 | 4415 |
| 30 Green | 20 | 21 | 4430 |
| 60 Green | 22 | 23 | 4460 |
| 90 Green | 24 | 25 | 4490 |
| 15 Yellow | 26 | 27 | 4515 |
| 30 Yellow | 28 | 29 | 4530 |
| 60 Yellow | 30 | 31 | 4560 |
| 90 Yellow | 32 | 33 | 4590 |
| 15 Red | 34 | 35 | 4615 |
| 30 Red | 36 | 37 | 4630 |
| 60 Red | 38 | 39 | 4660 |
| 90 Red | 40 | 41 | 4690 |
| 15 Magenta | 42 | 43 | 4715 |
| 30 Magenta | 44 | 45 | 4730 |
| 60 Magenta | 46 | 47 | 4760 |
| 90 Magenta | 48 | 49 | 4790 |
| 15 Pink | 50 | 51 | 4815 |
| 30 Pink | 52 | 53 | 4830 |
| 60 Pink | 54 | 55 | 4860 |
| 90 Pink | 56 | 57 | 4890 |
| 15 Lavender | 58 | 59 | 4915 |
| 30 Lavender | 60 | 61 | 4930 |
| 60 Lavender | 62 | 63 | 4960 |
| 90 Lavender | 64 | 65 | 4990 |
| Reserved for Future Use | 66 | 255 | - |

### Category | Rc: StSelection

| Function | 8 bit value | | Gel # |
|---|---|---|---|
| Gel Name | From | To | |
| VS Red | 0 | 1 | 2001 |
| VS Orange | 2 | 3 | 2202 |
| VS Yellow | 4 | 5 | 2003 |
| VS Green | 6 | 7 | 2004 |
| VS Cyan | 8 | 9 | 2005 |
| VS Azure | 10 | 11 | 2006 |
| VS Blue | 12 | 13 | 2007 |
| VS Indigo | 14 | 15 | 2008 |
| VS Violet | 16 | 17 | 2009 |
| VS Magenta | 18 | 19 | 2010 |
| Reserved | 20 | 255 | - |

### Category | Rc: C-Lux

| Function | 8 bit value | | Gel # |
|---|---|---|---|
| Gel Name | From | To | |
| Bastard Amber | 0 | 1 | 2 |
| Pale Bastard Amber | 2 | 3 | 302 |
| No Color Straw | 4 | 5 | 6 |
| Pale Gold | 6 | 7 | 8 |
| Daffodil | 8 | 9 | 310 |
| Straw | 10 | 11 | 12 |
| Light Amber | 12 | 13 | 16 |
| Gallo Gold | 14 | 15 | 316 |
| Light Flame | 16 | 17 | 17 |
| Flame | 18 | 19 | 18 |
| Mayan Sun | 20 | 21 | 318 |
| Golden Amber | 22 | 23 | 21 |
| Soft Golden Amber | 24 | 25 | 321 |
| Orange | 26 | 27 | 23 |
| Henny Sky | 28 | 29 | 325 |
| Light Red | 30 | 31 | 26 |
| No Color Pink | 32 | 33 | 33 |
| Blush Pink | 34 | 35 | 333 |
| Flesh Pink | 36 | 37 | 34 |
| Pale Rose Pink | 38 | 39 | 37 |
| Salmon | 40 | 41 | 41 |
| Deep Salmon | 42 | 43 | 42 |
| Middle Rose | 44 | 45 | 44 |
| Light Rose Purple | 46 | 47 | 47 |
| Surprise Pink | 48 | 49 | 51 |
| No Color Blue | 50 | 51 | 60 |
| Clearwater | 52 | 53 | 360 |
| Booster Blue | 54 | 55 | 62 |
| Tipton Blue | 56 | 57 | 362 |
| Blue Bell | 58 | 59 | 364 |
| Daylight Blue | 60 | 61 | 65 |
| Tharon Delft Blue | 62 | 63 | 365 |
| Cerulean Blue | 64 | 65 | 375 |
| Bermuda Blue | 66 | 67 | 376 |
| Green Blue | 68 | 69 | 77 |
| Alice Blue | 70 | 71 | 378 |
| Primary Blue | 72 | 73 | 80 |
| Baldassari Blue | 74 | 75 | 381 |
| Medium Blue | 76 | 77 | 83 |
| Pale Yellow Green | 78 | 79 | 87 |
| Light Green | 80 | 81 | 88 |
| Moss Green | 82 | 83 | 89 |
| Primary Green | 84 | 85 | 91 |
| Turquoise | 86 | 87 | 92 |
| Blue Green | 88 | 89 | 93 |
| Chocolate | 90 | 91 | 99 |
| Reserved for Future Use | 92 | 255 | - |

## Control Channel

| Function | | 8 bit value | | Note |
|---|---|---|---|---|
| | | From | To | |
| No Function / Safe | | 0 | 1 | Default @ 0<br>Hold 3s To Take Function |
| Pan | Reverse On | 2 | 3 | |
| | **Reverse Off** | 4 | 5 | |
| Tilt | Reverse On | 6 | 7 | |
| | **Reverse Off** | 8 | 9 | |
| Pan/Tilt Mode | **Mode Fast** | 10 | 11 | |
| | Mode Medium | 12 | 13 | |
| | Mode Slow | 14 | 15 | |
| Reserved | | 16 | 35 | |
| Display Backlight | Always On | 36 | 37 | |
| | 10s | 38 | 39 | |
| | 20s | 40 | 41 | |
| | **30s** | 42 | 43 | |
| Flip Display | On | 44 | 45 | |
| | Off | 46 | 47 | |
| | **Auto** | 48 | 49 | |
| Key Lock | On | 50 | 51 | |
| | **Off** | 52 | 53 | |
| Reserved | | 54 | 59 | |
| No Signal | **Hold** | 60 | 61 | |
| | Blackout | 62 | 63 | |
| Reserved | | 64 | 67 | |
| Dimmer Curve | Linear | 68 | 69 | |
| | S-Curve | 70 | 71 | |
| | **Square Law** | 72 | 73 | |
| | Inverse Square Law | 74 | 75 | |
| | High Res@Low | 76 | 77 | |
| Dimmer Speed | **Auto** | 78 | 79 | |
| | Fast | 80 | 81 | |
| | Medium | 82 | 83 | |
| | Slow | 84 | 85 | |
| | Off | 86 | 87 | |
| Dimmer | **Fade Off End** | 88 | 89 | |
| | Snap Off End | 90 | 91 | |
| Spektra | On | 92 | 93 | |
| | **Pure Colors** | 94 | 95 | |
| | Off | 96 | 97 | |
| Reserved | | 98 | 101 | |
| White Point | 3200k | 102 | 103 | |
| | 4000k | 104 | 105 | |
| | 5600k | 106 | 107 | |
| | 6000k | 108 | 109 | |
| | **6500k** | 110 | 111 | |
| | 8000k | 112 | 113 | |

## Control Channel

| Function | | 8 bit value | | Note |
|---|---|---|---|---|
| | | From | To | |
| Led Frequency | 600hz | 114 | 115 | Default @ 0<br>Hold 3s To Take Function |
| | **1200hz** | 116 | 117 | |
| | 2000hz | 118 | 119 | |
| | 4000hz | 120 | 121 | |
| | 6000hz | 122 | 123 | |
| | 25khz | 124 | 125 | |
| | 50khz | 126 | 127 | |
| Tungsten Emulation | On | 128 | 129 | |
| | **Off** | 130 | 131 | |
| Color Mixing<br>*(Only on STANDARD mode)* | RGB | 132 | 133 | |
| | CMY | 134 | 135 | |
| Invert Zoom | **Off** | 136 | 137 | |
| | On | 138 | 139 | |
| Invert Blades | **Off** | 140 | 141 | |
| | On | 142 | 143 | |
| Fan Mode | **Auto** | 144 | 145 | |
| | High | 146 | 147 | |
| | Silent 1 | 148 | 149 | |
| | Silent 2 | 150 | 151 | |
| Reserved | | 152 | 199 | |
| Reset | Reset All | 200 | 201 | |
| | Pan & Tilt | 202 | 203 | |
| | Zoom/Focus | 204 | 205 | |
| | Colors | 206 | 207 | |
| | Gobos/Animation | 208 | 209 | |
| | Effects | 210 | 211 | |
| | All Blades | 212 | 213 | |
| Reserved | | 214 | 251 | |
| Factory Default Of Control Functions | | 252 | 253 | |
| Reserved | | 254 | 255 | |