TWAUDiO®

M12

Operation manual

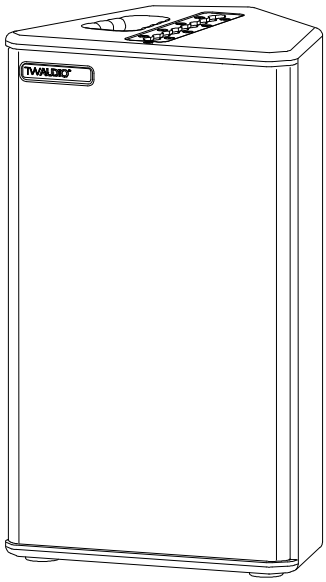

Introduction

Thank you for choosing a high-quality product “MADE IN GERMANY” from the brand TWAUDiO.

The M12 dispenses with extended bass reproduction, instead of placing special emphasis on enhanced mid-high performance.

It offers extraordinary increased efficiency from a compact enclosure with precise dispersion and impulse behavior with lowest possible distortion.

The M12 is eminently suitable for use as a high performance front fill or near fill, as a compact delay line loudspeaker or stage monitor, and especially as a 12“ top in a two-way active setup with our B18 and B30 subwoofers in our PA-SYS-TWO.

If you lend your product to another party, inform that party of the safety-related operating procedures and hand over this assembly guide. If you require additional copies of this manual, you can obtain them free of charge from TWAUDiO or download them from www.twaudio.de

Instructions in this user manual

Strictly adhere to the instructions contained in this operating manual that are marked as follows:

This symbol in combination with the signal word “Warning” identifies a potentially hazardous situation. Failure to comply with this safety instruction can lead to serious injury or even death.

This symbol in combination with the signal word “Warning” identifies a potentially hazardous situation for persons with a pacemaker. Failure to comply with this safety instruction can lead to serious injury or even death.

This symbol in combination with the signal word “Caution” identifies a potentially hazardous situation. Failure to comply with this safety instruction can lead to light or moderate injury.

This symbol in combination with the signal word “Note” identifies a potentially hazardous situation. Failure to comply with this safety instruction can lead to product damage.

TIP

This symbol in combination with the signal word “Tip” identifies additional information or notes that will simplify working with TW AUDiO products on the basis of practical experience.

Notes on the products

Read manual before use!

Before using the device, carefully read the operating manual and keep it with the M12 loudspeaker.

General information

Operation manual: OM-M12
Version 3.0 en, 02/2026
© by TW AUDiO INTERNATIONAL GmbH 2026; all rights reserved.

All information contained in this operating manual was correct to the best of our knowledge at the time of printing.

Quality warranties or assurance of suitability for a certain type of use based on the technical specifications, dimensions and weights are not granted by TW AUDiO.

TW AUDiO also shall not assume liability for any secondary damage (property damage and/or personal injury) nor for the failure to comply with this operating manual!

TW AUDiO reserves the right to update this document based on recent developments.

TW AUDiO INTERNATIONAL GmbH
Osterholzallee 140-2
71636 Ludwigsburg
Germany

Phone : + 49 (0) 71 41-48 89 89 0
Fax: + 49 (0) 71 41-48 89 89 99
E-Mail: info@twaudio.de
WWW: www.twaudio.de

Content

1. Safety | Intended use 5
2. Overview 7
2.1 Components 7
2.2 Variants 8
3. Technical specifications 9
3.1 Data sheet 9
3.2 Connection diagram 9
4. Commissioning 10
4.1 Setup 10
4.2 Rotating the HF horn 11
4.3 Operation 12
4.4 Connecting the cable 12
5. Transport and Storage 13
6. CE Conformity Declaration 14
7. Disposal 15

1. Safety | Intended use

Please adhere to the following safety instructions to avoid risks when operating loudspeakers.

The M12 loudspeaker was developed for use in professional sound systems. The loudspeaker may only be used by trained and qualified personnel.

Note the operating modes described in this operating manual. Other uses are not permissible.

Damage caused by improper use is not covered by TW AUDiO.

WARNING

Loudspeakers generate an electromagnetic field. Persons with pacemakers are not permitted to remain in the immediate vicinity of loudspeakers as the electromagnetic fields can cause pacemakers to malfunction.

WARNING

When working with heavy loads exceeding 20 kg (44 lbs.), use suitable aids (dollies, hoisting slings, etc.). Multiple persons may be required depending on the situation.

Ensure that the units are in a stable position and are firmly attached. A falling loudspeaker can result in serious personal injury and property damage.

When using and assembling TW AUDiO loudspeakers, only use materials specified by TW AUDiO. These tasks must be performed by qualified personnel. Adhere to the applicable safety regulations.

NOTE

When setting up loudspeakers, ensure that they are not exposed to the following ambient conditions:

- Direct sunlight
- Humidity
- Jolting
- Dust

WARNING

Keep away from the immediate vicinity of loudspeakers that are operated at high sound pressure levels. These loudspeaker systems are capable of endangering your health. Sound levels beginning as low as approximately 90 dB SPL can lead to long-term hearing impairment.

NOTE

Avoid:

- Feedback
- Distorted signals (clipping) and
- Peaks resulting from switching on devices, plugging in devices or unplugging devices during operation.

Such signals can lead to loudspeaker overload and ultimately to loudspeaker failure.

WARNING

Ensure that the loudspeaker is not exposed to permanent thermal overloads. Thermal overloads may cause a fire and result in serious personal injury and property damage.

Note that TW AUDiO does not provide a warranty for damage that can be attributed to this type of overload and therefore cannot be held liable for any secondary damage.

NOTE

A permanent magnetic field is present in the immediate vicinity of loudspeakers. Ensure that objects which react sensitively to magnetic fields are not located in the immediate vicinity of the loudspeaker. In particular, this applies to magnetic storage media, magnetic stripe cards such as debit cards and CRT displays. A distance of approximately one meter is sufficient to avoid damage.

NOTE

Check loudspeakers and accessory parts regularly for visible wear. This is essential to ensure continuing fault-free operation. Worn parts should be replaced immediately. Spare parts are available from TW AUDiO.

2. Overview

2.1 Components

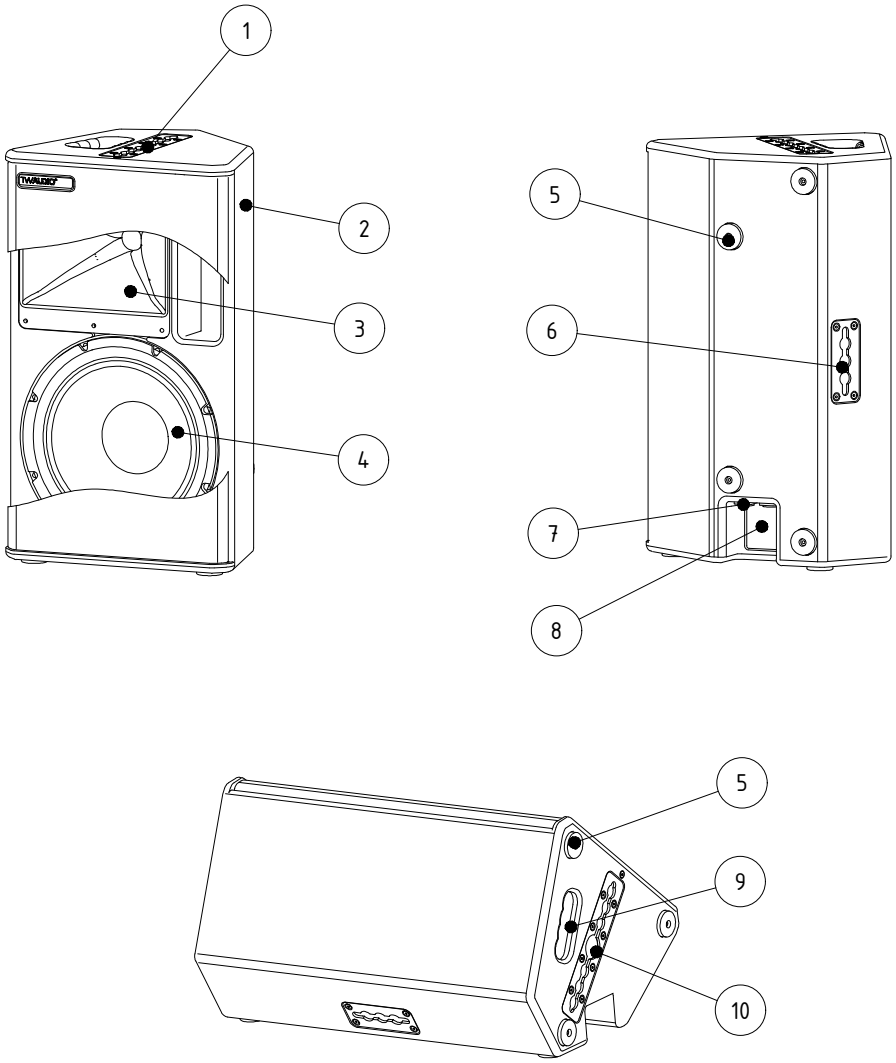

Figure 2.1 - Overview

1. Top rigging track
2. 15 mm multiplex enclosure - Warnex surface finish
3. Rotable horn with 1.4“ compression driver
4. 12“ cone driver
5. Rubber feet (4 pieces)
6. Rear rigging track
7. Connection panel with two SpeakON® connectors
8. Type label
9. Ergonomic carrying handle (top and bottom)
10. Bottom rigging track with integrated cabinet flange

2.2 Variants

The M12 loudspeaker is available in right and left variants. These versions differ in the side on which the slanted wedge is located on the enclosure.

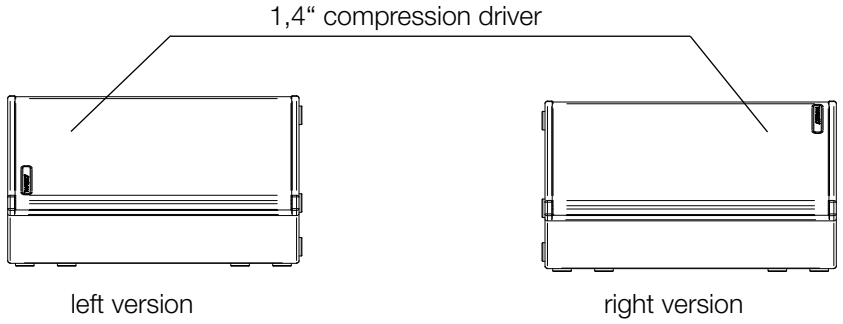

Figure 2.2 - Left and right versions

3. Technical specifications

3.1 Data sheet

Drivers	1x 12“ LF / 1x 1.4“ HF
Frequency response	60 - 19000 Hz
Power handling (program/Peak)	700 / 1400 W
Impedance	8 Ω
Coverage angles (h x v)	75° x 50°
Max. SPL / 1m	132 dB
Dimensions (w x h x d)	360 x 606 x 314 mm [14,17 x 22,86 x 12,36 in]
Weight	20,2 kg [44.5 lbs]
Surface	Polyurea-coated

3.2 Connection diagram

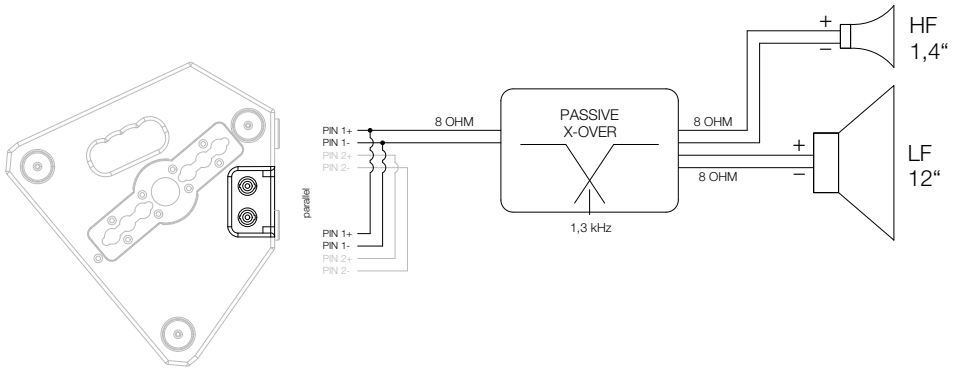

Figure 3.2 - Connection diagram

4. Commissioning

4.1 Setup

The M12 loudspeaker is designed for standing, vertical and horizontal operation. TWAUDiO provides a wide range of accessories to securely attach the loudspeaker.

WARNING

Make sure that all system structures are located on a firm, level surface and that the surface can bear the total weight!

WARNING

Make sure the speakers are securely fastened to prevent personal injury and property damage.

NOTE

TWAUDiO recommends using only the accessories specified by TWAUDiO for securing and mounting loudspeakers.

4.2 Rotating the HF horn

The horn of the M12 loudspeaker is positioned such that the horizontal coverage is 75° and the vertical coverage is 50°. In some situations, it may be advantageous to switch the coverage of the high-frequency range. To do this, you can rotate the horn of the M12 loudspeaker. Proceed as follows.

1. Place the M12 loudspeaker with the wedge inclined toward you with the grill facing up. Ensure that the working surface is clean with a non-slip finish.

2. To remove the front grill of the loudspeaker, use a 3 mm hex key. Remove the four screws on the top and bottom of the loudspeaker enclosure (two on each side).

3. Release the four screws of the horn using a 5 mm hex key.

4. Pull the horn upward out of the loudspeaker enclosure.

5. Check that the seal between the enclosure and horn is properly seated.

6. Rotate the horn carefully by 90° and reinsert the horn and driver back into the recess. Screw it onto the enclosure using medium-strength thread locker.

7. Screw the front grill back on hand-tight.

4.3 Operation

TW AUDiO recommends operating the M12 loudspeaker on a DSP controller. For this purpose, only presets developed by TW AUDiO are recommended. The TW AUDiO system racks are ideally suited for this purpose.

NOTE

Before connecting the loudspeaker to the amplifier, ensure that the right preset has been loaded.

Using a wrong, out dated or a preset not provided by TW AUDiO can lead to destruction of the speaker.

NOTE

Make sure that the amplifier's specifications meet the requirements. Using an amplifier that doesn't meet the specifications can destroy the loudspeaker.

Please note the technical data in section 3.1 on page 9.

4.4 Connecting the cable

To create a cable connection with an amplifier rack from TW AUDiO, proceed as follows.

NOTE

Ensure that the cable cross sectional area is sufficient (at least 1.5 mm²) to avoid power losses. TW AUDiO recommends using the loudspeaker cables available from TW AUDiO.

When connecting the cables to the loudspeaker, ensure that polarity (+/-) and pin assignment (1/2) are correct. Incorrect connection can lead to a significant change in the loudspeaker's sound characteristics and may damage the driver.

The pin connections of the M12 loudspeaker can be found in section 3.2 ("Connection diagram") on page 9.

The internal wiring of the M12 loudspeaker allows for parallel connection of multiple loudspeaker units.

Please note that parallel connections will decrease the total impedance of your loudspeaker configuration.

The total impedance and the resulting power of the speaker configuration must match the output power of the amplifier.

5. Transport and Storage

Because the M12 loudspeaker weights over 20 kg [44,09 lbs], two people are needed to move and transport the unit.

NOTE

To enable a single person to transport two M12 loudspeakers, TW AUDiO recommends using the CaseM12.

When transporting and storing the unit, it is important to ensure that the surface and front grill of the loudspeaker are not damaged. Moisture can penetrate through exposed wood surfaces and cause the wood to swell. A bent or broken front grill will no longer adequately protect the sensitive speaker membranes.

In addition, appreciable dust deposits may considerably impair the functionality of a loudspeaker membrane. For this reason, the loudspeakers should be transported and stored in a safe, careful, dry and largely dust-free manner.

The following accessory parts for transport and storage are available from TW AUDiO:

- CoverM12 (protective cover for one M12)
- CaseM12 (flightcase for two M12)

The original packaging is unsuitable as permanent storage and transport packaging.

6. CE Conformity Declaration

Copy and translation of the original CE Conformity Declaration:

We hereby declare that the below-referenced components by virtue of their design and construction, and in the configuration placed on the market by us, satisfy the safety and health requirements of the applicable EC directives. This declaration becomes invalid in case of modifications that have not been approved by us.

This declaration applies to the following components

- M12 L
- M12 R

as well as all model variants based on these, provided that they correspond to the original factory models and have not been technically modified in any way.

Applicable directives:

- 2001/95/EG
- 2011/65/EU

Applicable national standards and technical specifications:

- DIN EN 18 800
- DIN EN ISO 12 100
- DGUV Vorschrift 17 und 18
- EN 50581: 2013-02

Ludwigsburg, Germany, January 1st, 2021

Bernhard Wüstner

7. Disposal

It is prohibited to dispose of used electrical equipment with household refuse.

All TWAUDiO INTERNATIONAL GmbH products are so-called B2B-products. This means that they are sold by a commercial business to a commercial business. TWAUDiO products that bear the trash can symbol shown here may only be disposed of by TWAUDiO.

The loudspeaker owner is legally responsible for proper disposal of used devices that do not bear this symbol. This pertains to all products delivered prior to March 29, 2010. Nevertheless, TWAUDiO will also be happy to assist you in this case.

If you have any question regarding the disposal of used devices, please contact us under the following telephone number:

+49 (0) 71 41 - 48 89 89 0

Thus, TWAUDiO is in strict compliance with the Waste Electrical and Electronic Equipment Directive (2012/19/EU) for the protection of our environment.

TWAUDiO INTERNATIONAL is registered under the following WEEE-reg.-no. with the German National Register EAR as a B2B-manufacturer and distributor of electrical devices:

DE93295191

In countries outside of the European Union, comply with local regulations.

TW AUDiO INTERNATIONAL GmbH
Osterholzallee 140-2
71636 Ludwigsburg
Germany

Phone: + 49 (0) 71 41-48 89 89 0
Fax: + 49 (0) 71 41-48 89 89 99
E-Mail: info@twaudio.de
WWW: www.twaudio.de