I-MOTION EXPERT-T III

MOVEKET
KINETIC ENTERTAINMENT TECHNOLOGIES

MOVEKET I-MOTION EXPERT-T III System Controller complying with DGUV V 54 (BGV D8) and DGUV V 17 (BGV C1), as well as IGVW SQ P2 D8 Plus and EN 61508 SIL 3

D8 | D8 Plus | C1

State-of-the-art kinetic show controller for the systemic control of kinetic drives for large and complex projects. Developed for applications with up to 240 drives, it allows the control and supervision of any application, with DGUV V 54 (BGV D8), D8 Plus and DGUV V 17 (BGV C1) and various other drives at fixed or variable speeds. Control in mixed operation of drives of all kinds can be realized without problems It is even possible to integrate already existing drives and other stage machinery.

The controller complies in its basic configuration to DGUV V 17 (BGV C1) and EN 61508 SIL 3 and is therefore equipped for scenic runs over persons.
The Expert-T III System Controller controls and supervises via I-Motion network the MOVEKET MPC-4ID8/C1 and V-Motion Power Controller and forms with them a closed safety network. An error in one unit is analysed centrally, represented visually and leads depending upon the system configuration to the immediate shutting down of a hoist/drive, the group to which it belongs or even the entire system.

The safe, efficient and intuitive control of key operating and run parameters is facilitated by an application-optimized, backlit input keyboard with tactile feedback and a multifunctional 3D control knob. It is further enhanced by a 24“ touchscreen. The touchscreen takes over the visual representation of the operating, input and system parameters, in a choice of 2D or 3D displays. The user has at all times therefore an overview of the rig and instant access to parameters and details. Complex target* and group* runs even in the case of possible interactions can be programmed and executed. (*depending upon the hoist/drive configuration)
For direct operation, two dynamic control levers are available as well as five CUE start buttons for the recall and execution of scene changes and shows.
An integrated SSD disk as storage medium allows the storage of all system parameters and numerous shows (the actual number depends upon the size of the SSD disk). The data can be exported and stored externally.

The I-Motion Expert-T III system in combination with the I-Motion and V-Motion Power Controllers represents the state-of-the-art solution for professional, complex as well as scenic kinetic applications in the trade fair, events, studio and touring sectors.

Features

- implementation in accordance with DGUV V 17 (BGV C1) and EN 61508 SIL 3
- Stop Categories 0 and 1
- 32-bit high-performance buss system
- dual channel drive processor in accordance with SIL 3
- high-performance multi-core CPU, active cooling
- operating states stored in non-volatile storage modules
- self-test of all relevant functions prior to system release
- night design, buttons and input devices illuminated
- intuitive operation, 89 hot keys, trackball, 3D navigator, 2 joysticks, 5 CUE buttons, 24“ PCAP touchscreen
- user hierarchy implemented by means of user ID chip card or password
- group-transcending error supervision when connected in a network
- supervision and display of the operating states* of the hoists/drives such as run direction, speed, position, operating and emergency limit, excess temperature, brake gap monitoring, dynamic load analysis as well as load and run groups.
- parallel operation of 2 devices
- internal UPS (10 minutes) with line filter

Copyright 2025 © MOVEKET GmbH | Rudolf-Diesel-Straße 21 | D-71154 Nufringen | T: +49 [0] 70 32 - 98 51 - 0 | F: +49 [0] 70 32 - 98 51 - 99 | contact@moveket.de | www.moveket.de

I-MOTION EXPERT-T III

MOVEKET
KINETIC ENTERTAINMENT TECHNOLOGIES

MOVEKET I-MOTION EXPERT-T III System Controller complying with DGUV V 54 (BGV D8)
and DGUV V 17 (BGV C1), as well as IGVW SQ P2 D8 Plus and EN 61508 SIL 3

Software

- MOVEKET I-Motion
- up to 240 drives in network integration
- show-based programming and recall modes
- 3D object programming
- 2D and 3D WYSIWYG display switchable, zoomable
- unlimited* number of shows and scene changes/cues *(depending upon the size of the SSD hard disk)
- expanded operating/display level on a second
- monitor HDMI Out
- optional multi-user operation with central data storage on MOVEKET I-Motion server
- DMX, SMPTE, Media Server ready
- chip card evaluation with user level management
- download function of the drive parameters
- speed way points for fixed profile
- profile and snapshot recorder
- input of software operating limit positions
- management of free and closed drive groups
- way and time synchronous group runs*
- group synchronous run (central up and down movement of preselected hoists/axes) with several run groups programmable
- programming and recall of complex, successive show sequences
- acceleration and braking of drives and groups
- supervision of the run direction and target speeds and complementary overload ascertainment through analysis of the rated speed when encoder-operated
- set-up possibility for underload*/overload* definition
- drive patch for the global exchange of hoists/drives in shows
- driver's log function, allows display and export
- import/export of show files on server and USB memory stick
- analysis of external setup signals*

*The functions listed depend upon the actual hoist/drive configuration

Options / Accessories

- protection cover
- two-colour (white/blue), dimmable gooseneck lamp
- standard road case
- swivel-motion road case
- I-Motion NMB-14, Network Master Box
- I-Motion NDB-6, Network Distribution Box
- V-Motion Motion Power Controller
- MPC I-Motion Power Controller series
- I-MOTION interface (DMX, SMTP, Media Server)

Equipment

- 24" high-resolution/-brightness outdoor display (daylight capable)
- 24" PCAP outdoor multi-touch panel (scratchproof, temperature and moisture resistant)
- direct input keyboard, backlit, 89 hot keys
- pull-out, backlit, alphanumeric keyboard
- 3D-Space Navigator, multi-functional control knob
- 2 dynamic control levers with dead-man function
- E-Stop button, function-illuminated
- 2 additional dead-man buttons
- 5 cue start buttons
- 3 incremental limit controllers
- trackball with capacitive detection and illumination
- main switch for central start-up
- SSD disk
- USB port on the front panel
- 2 USB ports for mouse/M-stick etc., rear panel
- 2 x C14FC I-Motion-Net output connectors
- HDMI output for second monitor
- robust housing with handles
- two C4FC built-in connectors on the front panel for a two-colour gooseneck lamp

Technical data

- 100 to 240 V AC / 47 to 63 Hz power supply
- dimensions: 710 x 737 x 482 (Width x Depth x Height)
- weight: 39 kg
- conforms to DGUV V 17 (BGV C1), EN 61508 SIL 3, DGUV V 54 (BGV D8), IGVW SQ P2 D8 Plus

Trolley for MOVEKET I-Motion Expert-T III

- efreely adjustable, lift 300 mm
- 2 castors 80 mm braked
- 3 castors 80 mm unbraked
- Colour: black/silver

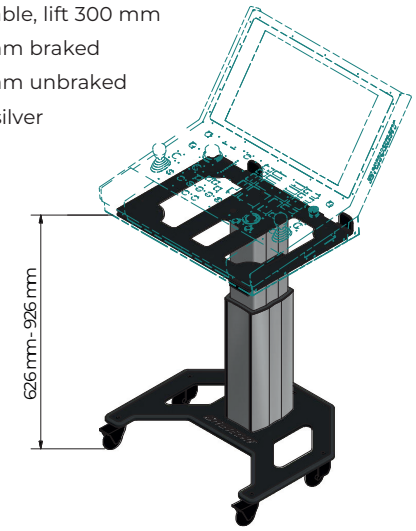

Subject to technical modifications and typographical errors.

Copyright 2025 © MOVEKET GmbH | Rudolf-Diesel-Straße 21 | D-71154 Nufringen | T: +49 [0] 70 32 - 98 51 - 0 | F: +49 [0] 70 32 - 98 51 - 99 | contact@moveket.de | www.moveket.de