DMX CHARTS

RDM Personality ID List

ID	DMX Mode	Footprint
1	STANDARD	20

RDM Model ID

0xA034

PAN/TILT POSITION RELATED TO DMX VALUES

*Home position set to CUSTOM (**Default**)*

Pan = 0
Tilt = 0

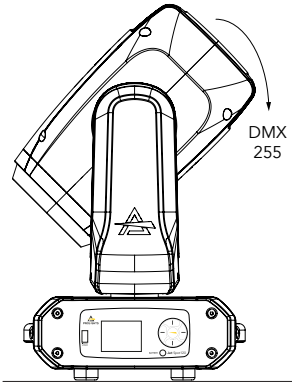

Pan = 0
Tilt = 128

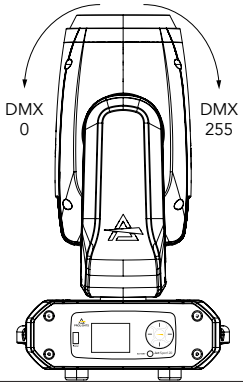

Pan = 0
Tilt = 255

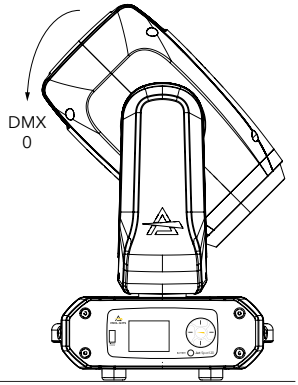

Tilt movement range: 260°
Pan movement range: 540°

Pan = 0
Tilt = 42

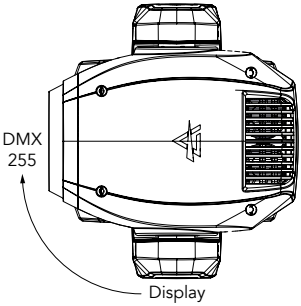

Pan = 128
Tilt = 42

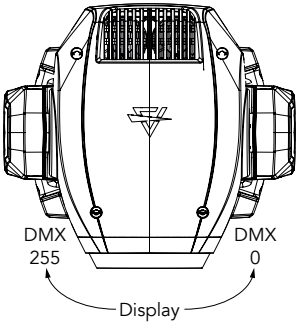

Pan = 255
Tilt = 42

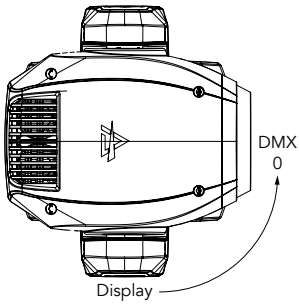

PAN/TILT POSITION RELATED TO DMX VALUES

Home position set to STANDARD (User selectable)

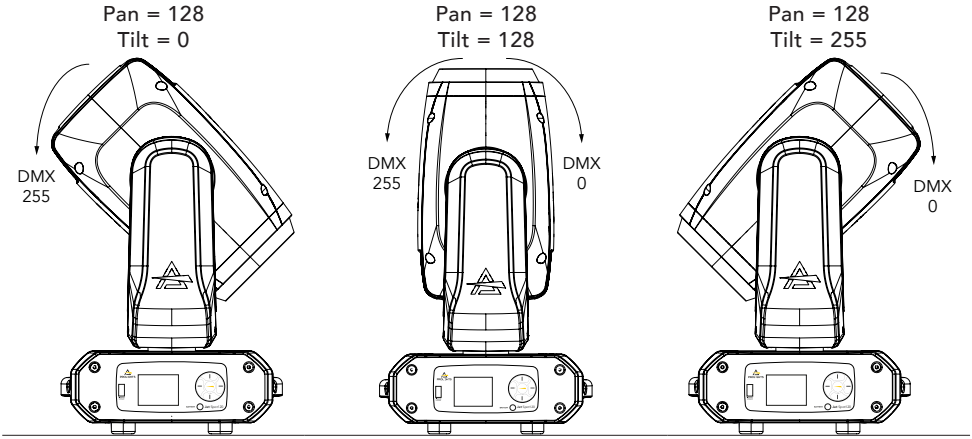

Tilt movement range: 260°
Pan movement range: 540°

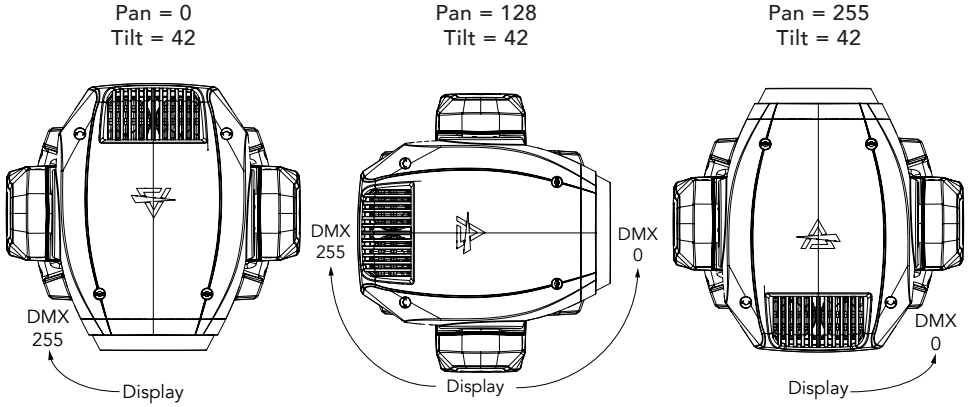

DMX Chart Summary

Channel	STANDARD
1	Pan
2	Pan fine
3	Tilt
4	Tilt fine
5	Dimmer
6	Dimmer Fine
7	Shutter
8	Color Wheel
9	Rot Gobo
10	Gobo Rot
11	Gobo Rot Fine
12	Fixed Gobo
13	Prism
14	Prism Rotation
15	Frost
16	Zoom
17	Zoom Fine
18	Focus
19	Focus Fine
20	Control

Channel STANDARD	Name	Function	Min DMX	Max DMX	Default
1	Pan	Lineary from 0% to 100%	0	255	128
2	Pan fine	Lineary from 0% to 100%	0	255	128
3	Tilt	Lineary from 0% to 100%	0	255	128
4	Tilt fine	Lineary from 0% to 100%	0	255	128
5	Dimmer	Lineary from close to open	0	255	000
6	Dimmer Fine	Lineary from close to open	0	255	000
7	Shutter	Close	0	1	255
		Strobe from slow to fast	2	62	
		Open	63	64	
		Pulse in from slow to fast	65	125	
		Open	126	127	
		Pulse out from slow to fast	128	188	
		Open	189	190	
		Randon from slow to fast	191	251	
		Open	252	255	
8	Color wheel	Open	0		000
		Color Positioning			
		Open + Dark Red	1	14	
		Dark Red	15		
		Dark Red + Yellow	16	29	
		Yellow	30		
		Yellow + Magenta	31	44	
		Magenta	45		
		Magenta + Cyan	46	59	
		Cyan	60		
		Cyan + Deep Orange	61	74	
		Deep Orange	75		
		Deep Orange + Forest Green	76	89	
		Forest Green	90		
		Forest Green + CTO 3200K	91	104	
		CTO 3200K	105		
		CTO 3200K + Deep Blue	106	119	
		Deep Blue	120		
		Deep Blue + Open	121	134	
		Open	135	159	
		Color Slot			
		Open	160	161	
		Dark Red	162	163	
		Yellow	164	165	
		Magenta	166	167	
		Cyan	168	169	
		Deep Orange	170	171	
		Forest Green	172	173	
		CTO 3200K	174	175	
		Deep Blue	176	199	

Channel STANDARD	Name	Function	Min DMX	Max DMX	Default
8	Color wheel	***Color Wheel Rotation***			
		Forward rainbow - Fast to slow	200	224	
		No rotation	225	230	
		Backwards rainbow - Slow to fast	231	255	
9	Rot Gobo	Open	0	11	000
		Gobo Indexing			
		GOBO 1	12	19	
		GOBO 2	20	27	
		GOBO 3	28	35	
		GOBO 4	36	43	
		GOBO 5	44	51	
		GOBO 6	52	59	
		GOBO 7	60	67	
		Gobo Rotation			
		GOBO 1	68	75	
		GOBO 2	76	83	
		GOBO 3	84	91	
		GOBO 4	92	99	
		GOBO 5	100	107	
		GOBO 6	108	115	
		GOBO 7	116	123	
		Gobo shaking - Slow to fast			
		GOBO 1	124	133	
		GOBO 2	134	143	
		GOBO 3	144	153	
		GOBO 4	154	163	
		GOBO 5	164	173	
		GOBO 6	174	183	
		GOBO 7	184	193	
		Gobo Wheel Rotation			
		Forward rotation - Fast to slow	194	223	
		No rotation	224	225	
		Backwards rotation - Slow to fast	226	255	
10	Gobo Rot	***Gobo Indexing***			000
		Gobo index 0° - 360°	0	255	
		Gobo Rotation			
		No rotation	0	0	
		Forward gobo rotation - Fast to slow	1	127	
		No rotation	128	128	
		Backwards gobo rotation - Slow to fast	129	255	

Channel STANDARD	Name	Function	Min DMX	Max DMX	Default
11	Gobo Rot Fine	Fine indexing/rotation	0	255	000
12	Fixed Gobo	Open	0	3	000
		GOBO 1	4	7	
		GOBO 2	8	11	
		GOBO 3	12	15	
		GOBO 4	16	19	
		GOBO 5	20	23	
		GOBO 6	24	27	
		GOBO 7	28	31	
		GOBO 8	32	35	
		GOBO 9	36	39	
		GOBO 10	40	43	
		Gobo shaking - Slow to fast			
		GOBO 1	44	58	
		GOBO 2	59	73	
		GOBO 3	74	88	
		GOBO 4	89	103	
		GOBO 5	104	118	
		GOBO 6	119	133	
		GOBO 7	134	148	
		GOBO 8	149	163	
		GOBO 9	164	178	
		GOBO 10	179	193	
		Gobo Wheel Rotation			
		Forward rotation - Fast to slow	194	223	
		No rotation	224	225	
		Backwards rotation - Slow to fast	226	255	
13	Prism	Open	0	29	000
		Prism Indexing (set next ch)	30	59	
		Prism Rotation (set next ch)	60	89	
		Reserved	90	255	
14	Prism Rotation	***Prism Indexing***			000
		Prism Indexing	0	255	
		Prism Rotation			
		Prism No Rotation	0	0	
		Prism forward rotation fast to slow	1	127	
		Prism No Rotation	128	128	
		Prism backwards rotation slow to fast	129	255	
15	Frost	Lineary from 0% to 100%	0	255	000
16	Zoom	Lineary from Narrow to Wide	0	255	128
17	Zoom Fine	Fine Zoom Position	0	255	128
18	Focus	Lineary from Far to Near	0	255	128
19	Focus Fine	Fine Focus Position	0	255	128

Channel STANDARD	Name	Function	Min DMX	Max DMX	Default
20	Control	No Function/Safe	0	1	000
		PAN REVERSE ON	2	3	
		PAN REVERSE OFF	4	5	
		TILT REVERSE ON	6	7	
		TILT REVERSE OFF	8	9	
		PAN/TILT MODE FAST	10	11	
		PAN/TILT MODE MEDIUM	12	13	
		PAN/TILT MODE SLOW	14	15	
		MOVEMENT IN BLACKOUT ON	16	17	
		MOVEMENT IN BLACKOUT OFF	18	19	
		COLOR WHEEL BLACKOUT ON (index)	20	21	
		COLOR WHEEL BLACKOUT OFF (index)	22	23	
		ROTATING GOBO WHEEL BLACKOUT ON (index)	24	25	
		ROTATING GOBO WHEEL BLACKOUT OFF (index)	26	27	
		FIXED GOBO WHEEL BLACKOUT ON (index)	28	29	
		FIXED GOBO WHEEL BLACKOUT OFF (index)	30	31	
		ROTATING GOBO WHEEL CONTINUOUS MOVEMENT (index)	32	33	
		ROTATING GOBO WHEEL STEP MOVEMENT (index)	34	35	
		FIXED GOBO WHEEL CONTINUOUS MOVE-MENT (index)	36	37	
		FIXED GOBO WHEEL STEP MOVEMENT (index)	38	39	
		HOME MODE STANDARD	40	41	
		HOME MODE CUSTOM	42	43	
		DISPLAY ON	44	45	
		DISPLAY 10S	46	47	
		DISPLAY 20S	48	49	
		DISPLAY 30S	50	51	
		FLIP DISPLAY ON	52	53	
		FLIP DISPLAY OFF	54	55	
		FLIP DISPLAY AUTO	56	57	
		KEY LOCK ON	58	59	
		KEY LOCK OFF	60	61	
		FAN MODE AUTO	62	63	
		FAN MODE SILENT	64	65	
		FAN MODE HIGH	66	67	
		NO SIGNAL HOLD	68	69	
		NO SIGNAL BLACKOUT	70	71	
		DIMMER CURVE LINEAR	72	73	
		DIMMER CURVE S-CURVE	74	75	
		DIMMER CURVE SQUARE LAW	76	77	

Channel STANDARD	Name	Function	Min DMX	Max DMX	Default
20	Control	DIMMER CURVE INVERSE SQUARE LAW	78	79	000
		DIMMER SPEED AUTO	80	81	
		DIMMER SPEED FAST	82	83	
		DIMMER SPEED MEDIUM	84	85	
		DIMMER SPEED SLOW	86	87	
		LED FREQUENCY 600HZ	88	89	
		LED FREQUENCY 1200HZ	90	91	
		LED FREQUENCY 2000HZ	92	93	
		LED FREQUENCY 4000HZ	94	95	
		LED FREQUENCY 6000HZ	96	97	
		LED FREQUENCY 25KHZ	98	99	
		LED FREQUENCY 50KHZ	100	101	
		INVERT ZOOM OFF	102	103	
		INVERT ZOOM ON	104	105	
		RESET ALL	106	107	
		RESET PAN/TILT	108	109	
		RESET PAN	110	111	
		RESET TILT	112	113	
		RESET COLOR	114	115	
		RESET ROTATING GOBO	116	117	
		RESET FIXED GOBO	118	119	
		RESET ZOOM	120	121	
		RESET FOCUS	122	123	
		RESET PRISM	124	125	
		RESET FROST	126	127	
		RESET OTHER	128	129	
		Reserved	130	251	
		FACTORY DEFAULT OF CONTROL FUNCTIONS	252	253	
		Reserved	254	255	