TWAUDiO®

FDB15

Operating manual

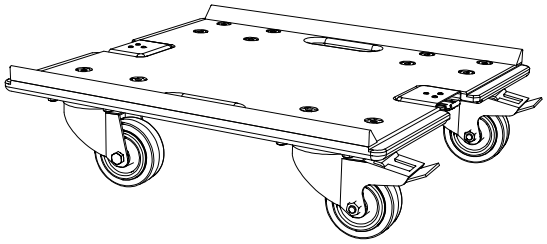

Introduction

Thank you for choosing a high-quality product “MADE IN GERMANY” from the brand TWAUDiO.

The FDB15 dolly is an accessory for the B15 loudspeaker.

This accessory set is characterized by a subtle look, a remarkable size to weight ratio and ease of use.

If you lend your product to another party, inform that party of the safety-related operating procedures and hand over this assembly guide. If you require additional copies of this manual, you can obtain them free of charge from TWAUDiO or download them from www.twaudio.de

Instructions in this user manual

Strictly adhere to the instructions contained in this operating manual that are marked as follows:

This symbol in combination with the signal word “Warning” identifies a potentially hazardous situation. Failure to comply with this safety instruction can lead to serious injury or even death.

This symbol in combination with the signal word “Caution” identifies a potentially hazardous situation. Failure to comply with this safety instruction can lead to light or moderate injury.

This symbol in combination with the signal word “Note” identifies a potentially hazardous situation. Failure to comply with this safety instruction can lead to product damage.

This symbol in combination with the signal word “Tip” identifies additional information or notes that will simplify working with TWAUDiO products on the basis of practical experience.

Notes on the products

Read manual before use!

Before using the device, carefully read the operating manual and keep it with the FDB15 dolly.

General information

Operation manual: OM-FDB15
Version 3.0 en, 05/2025
© by TW AUDiO INTERNATIONAL GmbH 2025; all rights reserved.

All information contained in this operating manual was correct to the best of our knowledge at the time of printing.

Quality warranties or assurance of suitability for a certain type of use based on the technical specifications, dimensions and weights are not granted by TW AUDiO.

TW AUDiO also shall not assume liability for any secondary damage (property damage and/or personal injury) nor for the failure to comply with this operating manual!

TW AUDiO reserves the right to update this document based on recent developments.

TW AUDiO INTERNATIONAL GmbH
Osterholzallee 140-2
71636 Ludwigsburg
Germany

Phone : + 49 (0) 71 41-48 89 89 0
Fax: + 49 (0) 71 41-48 89 89 99
E-Mail: info@twaudio.de
WWW: www.twaudio.de

Content

1. Safety | Intended use 5
2. Overview 6
2.1 Components 6
3. Technical specifications 7
3.1 Data sheet 7
4. Commissioning 8
4.1 Using FDB15 dolly with B15 loudspeaker 8
5. Transport and Storage 10
6. CE Conformity Declaration 11
7. Disposal 11

1. Safety | Intended use

Please adhere to the following safety instructions to avoid risks when using accessories.

The FDB15 dolly was developed for professional use in sound systems. The dolly may only be used by trained and qualified personnel.

Note the operating modes described in this operating manual. Other uses are not permissible.

Damage caused by improper use is not covered by TW AUDiO.

WARNING

Before each use, check the integrity of the FDB15 dolly and ensure that all components are in perfect condition.

WARNING

The FDB15 dolly may only be used with the B15 loudspeaker.

These operating manual describe how to use the FDB15 dolly. Any other use shall be deemed improper and may result in damage or even injury.

Modifications or alterations to individual parts of the FDB15 dolly are not permitted! Danger to life!

CAUTION

The FDB15 is an accessory designed both for indoor and outdoor use.

WARNING

The FDB15 dolly may only be used by trained and qualified personnel. Personnel must check the FDB15 for its full suitability before each use.

WARNING

When visible damage to any part of the FDB15 dolly is detected, it must be decommissioned immediately.

WARNING

When moving the FDB15 dolly, ensure full load-bearing capacity and stability of the substrate.

The FDB15 dolly is specified for a load of not more than one B15 loudspeaker. This load capacity must never be exceeded!

WARNING

During movement (assembly or dismantling, transport to the place of use) of the FDB15 dolly with the B15 loudspeaker, ensure sufficient space to prevent collisions with other objects.

2. Overview

2.1 Components

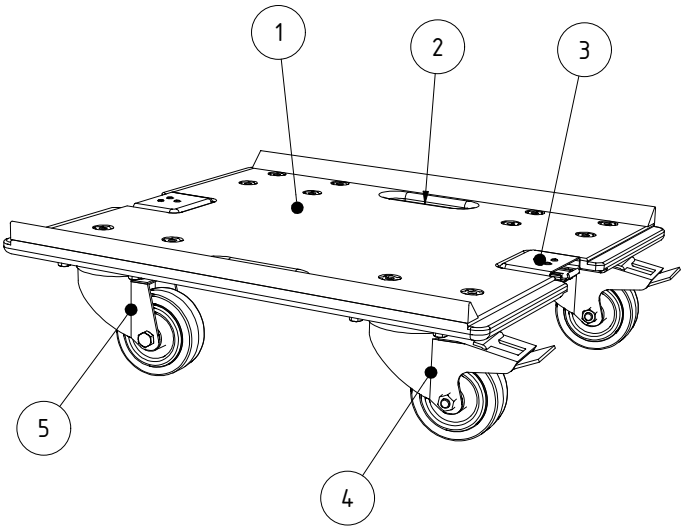

Figure 2.1 - Overview

1. Dolly - Surface Polyurea-coated..... 1 piece
2. Handles..... 2 pieces
3. Butterfly-Latch, middle..... 2 pieces
4. 80mm castor with stopper..... 2 pieces
5. 80mm castor without stopper..... 2 pieces

3. Technical specifications

3.1 Data sheet

Maximum load capacity	1x B15
Dimensions (h x w x d)	500 x 440 x 140 mm [19.7 x 17.3 x 5.5 in]
Weight	5,9 kg [13 lbs]
Surface	Polyurea-coated

4. Commissioning

4.1 Using FDB15 dolly with B15 loudspeaker

WARNING

Please note that two persons are always required to set up the FDB15 dolly with the B15 loudspeaker!

WARNING

Place the B15 loudspeaker sideways upright on the floor and position the FDB15 dolly so that the castors with stoppers are at the top.

Attach the FDB15 dolly to the B15 loudspeaker using the butterfly latches.

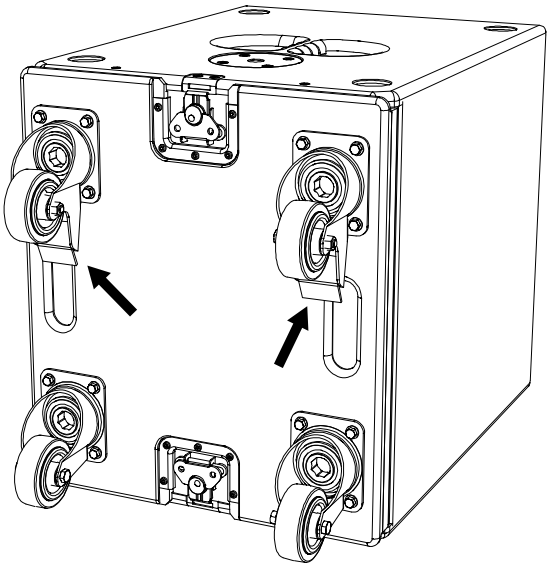

Figure 4.1.1 - Transport setup B15 loudspeaker with FDB15

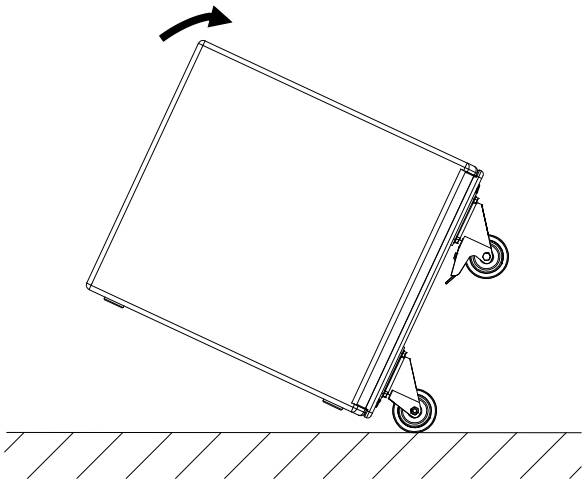

Figure 4.1.2 - Put up the B15 loudspeaker with FDB15

WARNING

When moving the FDB15 dolly transport assembly with the B15 loudspeaker, note that there is a risk of tipping due to the high center of gravity.

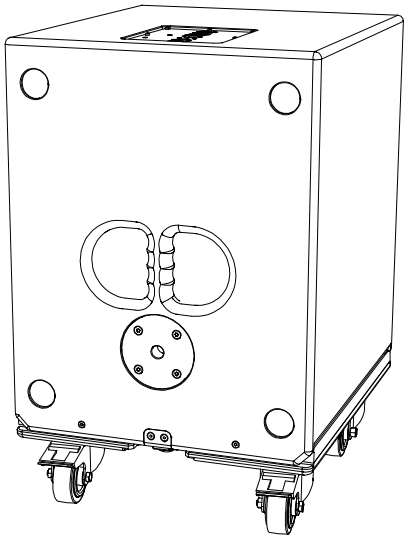

Figure 4.1.3 - Moving B15 loudspeaker with FDB15

5. Transport and Storage

NOTE

Ensure that the surface of the dolly is not damaged during transport and storage. Moisture can penetrate through exposed wood surfaces and cause the wood to swell.

This is why the product should be transported in a safe, careful, dry and largely dust-free manner.

The following transport and storage accessories are available from TW AUDiO:

- CoverB15 (Protective cover)

The original packaging is unsuitable as permanent storage and transport packaging.

6. CE Conformity Declaration

Copy and translation of the original CE Conformity Declaration:

We hereby declare that the below-referenced components by virtue of their design and construction, and in the configuration placed on the market by us, satisfy the safety and health requirements of the applicable EC directives. This declaration becomes invalid in case of modifications that have not been approved by us.

This declaration applies to the following components

• FDB15

as well as all model variants based on these, provided that they correspond to the original factory models and have not been technically modified in any way.

Applicable directives:

• 2001/95/EG

Applicable national standards and technical specifications:

• DIN EN ISO 12 100
• DGUV Vorschrift 17 und 18

Ludwigsburg, Germany, January 1st, 2021

Bernhard Wüstner

7. Disposal

If you have any question regarding the disposal of used devices, please contact us under the following telephone number:

+49 (0) 71 41 - 48 89 89 0

In countries outside of the European Union, comply with local regulations.

TW AUDiO INTERNATIONAL GmbH
Osterholzallee 140-2
71636 Ludwigsburg
Germany

Phone: + 49 (0) 71 41-48 89 89 0
Fax: + 49 (0) 71 41-48 89 89 99
E-Mail: info@twaudio.de
WWW: www.twaudio.de