TWAUDiO®

ELLA6

Operation manual

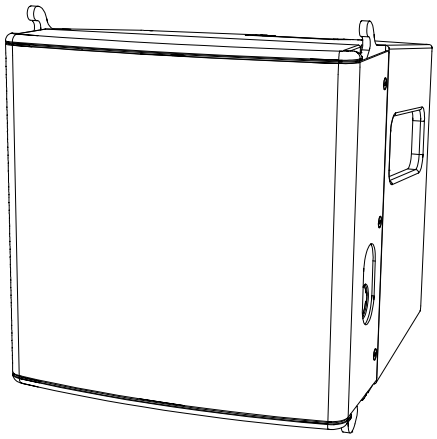

Introduction

Thank you for choosing a high-quality product “MADE IN GERMANY” from the brand TWAUDiO.

ELLA combines the slim form factor of a column with the flexibility of a line array as well as built in passive cardioid technology.

Behind its well designed front panel ELLA6 offers a newly developed feature - a specially engineered waveguide with five 1“ dome tweeters which reproduce silky smooth and precise high frequencies up to 20 kHz, matched with a custom designed high performance 6.5“ driver. A new outstandingly acoustical listening experience ensuring astonishment among the audience, without compromise, even at high SPL.

Another unique feature of ELLA is the built in passive cardioid system. Due to the special acoustical resistors at the back of the enclosure, ELLA has a cardioid directivity pattern over the entire frequency range. ELLA6 has a nominal impedance of 24 Ohms – so it is possible to connect multiple speakers in parallel, there is no additional amp channel required for the cardioid effect.

There is one more key feature to be mentioned - the optically refined, almost invisible integrated rigging hardware, which can easily transform a multi-element column into a true line array. There are no pins or striking company logos on the front grille to disturb the timelessly simple appearance. Assembly is quite simply clever, fast and cost-effective. With a simple mechanism, the elements can be connected and the six splay angles adjusted.

Regarding ELLA‘s flexibility: The well thought-out accessories support you in all your different sound applications. Whether stacked on the design pillar for a conference or in a choir situation in a church, on a VERA S32 cardio sub for a gala or flown as an array for the concert in the local town hall.

If you lend your product to another party, inform that party of the safety-related operating procedures and hand over this assembly guide. If you require additional copies of this manual, you can obtain them free of charge from TWAUDiO or download them from www.twaudio.de

Instructions in this user manual

Strictly adhere to the instructions contained in this operating manual that are marked as follows:

This symbol in combination with the signal word “Warning” identifies a potentially hazardous situation. Failure to comply with this safety instruction can lead to serious injury or even death.

This symbol in combination with the signal word “Warning” identifies a potentially hazardous situation for persons with a pacemaker. Failure to comply with this safety instruction can lead to serious injury or even death.

CAUTION

This symbol in combination with the signal word “Caution” identifies a potentially hazardous situation. Failure to comply with this safety instruction can lead to light or moderate injury.

NOTE

This symbol in combination with the signal word “Note” identifies a potentially hazardous situation. Failure to comply with this safety instruction can lead to product damage.

TIP

This symbol in combination with the signal word “Tip” identifies additional information or notes that will simplify working with TW AUDiO products on the basis of practical experience.

Notes on the products

Read manual before use!

Before using the device, carefully read the operating manual and keep it with the ELLA6 loudspeaker.

General information

Operation manual: OM-ELLA6
Version 3.0 en, 01/2026
© by TW AUDiO INTERNATIONAL GmbH 2026; all rights reserved.

All information contained in this operating manual was correct to the best of our knowledge at the time of printing.

Quality warranties or assurance of suitability for a certain type of use based on the technical specifications, dimensions and weights are not granted by TW AUDiO.

TW AUDiO also shall not assume liability for any secondary damage (property damage and/or personal injury) nor for the failure to comply with this operating manual!

TW AUDiO reserves the right to update this document based on recent developments.

TW AUDiO INTERNATIONAL GmbH
Osterholzallee 140-2
71636 Ludwigsburg
Germany

Phone : + 49 (0) 71 41-48 89 89 0
Fax: + 49 (0) 71 41-48 89 89 99
E-Mail: info@twaudio.de
WWW: www.twaudio.de

Content

1. Safety | Intended use 5
2. Overview 7
2.1 Components 7
2.2 Rear rigging ELLA6 8
2.3 HF-Array 9
3. Technical specifications 10
3.1 Data sheet 10
3.2 Connection diagram 10
4. Commissioning 11
4.1 Setup 11
4.2 Rigging ELLA6 12
4.3 Operation 13
4.4 Connecting the cable 14
5. Transport and Storage 15
6. CE Conformity Declaration 16
7. Disposal 17

1. Safety | Intended use

Please adhere to the following safety instructions to avoid risks when operating loudspeakers.

The ELLA6 loudspeaker was developed for use in professional sound systems. The loudspeaker may only be used by trained and qualified personnel.

Note the operating modes described in this operating manual. Other uses are not permissible.

Damage caused by improper use is not covered by TW AUDiO.

WARNING

Loudspeakers generate an electromagnetic field. Persons with pacemakers are not permitted to remain in the immediate vicinity of loudspeakers as the electromagnetic fields can cause pacemakers to malfunction.

WARNING

Ensure that the units are in a stable position and are firmly attached. A falling loudspeaker can result in serious personal injury and property damage.

When using and assembling TW AUDiO loudspeakers, only use materials specified by TW AUDiO. These tasks must be performed by qualified personnel. Adhere to the applicable safety regulations.

NOTE

When setting up loudspeakers, ensure that they are not exposed to the following ambient conditions:

- Direct sunlight
- Humidity
- Jolting
- Dust

WARNING

Keep away from the immediate vicinity of loudspeakers that are operated at high sound pressure levels. These loudspeaker systems are capable of endangering your health. Sound levels beginning as low as approximately 90 dB SPL can lead to long-term hearing impairment.

NOTE

Avoid:

- Feedback
- Distorted signals (clipping) and
- Peaks resulting from switching on devices, plugging in devices or unplugging devices during operation.

Such signals can lead to loudspeaker overload and ultimately to loudspeaker failure.

WARNING

Ensure that the loudspeaker is not exposed to permanent thermal overloads. Thermal overloads may cause a fire and result in serious personal injury and property damage.

Note that TW AUDiO does not provide a warranty for damage that can be attributed to this type of overload and therefore cannot be held liable for any secondary damage.

NOTE

A permanent magnetic field is present in the immediate vicinity of loudspeakers. Ensure that objects which react sensitively to magnetic fields are not located in the immediate vicinity of the loudspeaker. In particular, this applies to magnetic storage media, magnetic stripe cards such as debit cards and CRT displays. A distance of approximately one meter is sufficient to avoid damage.

NOTE

Check loudspeakers and accessory parts regularly for visible wear. This is essential to ensure continuing fault-free operation. Worn parts should be replaced immediately. Spare parts are available from TW AUDiO.

2. Overview

2.1 Components

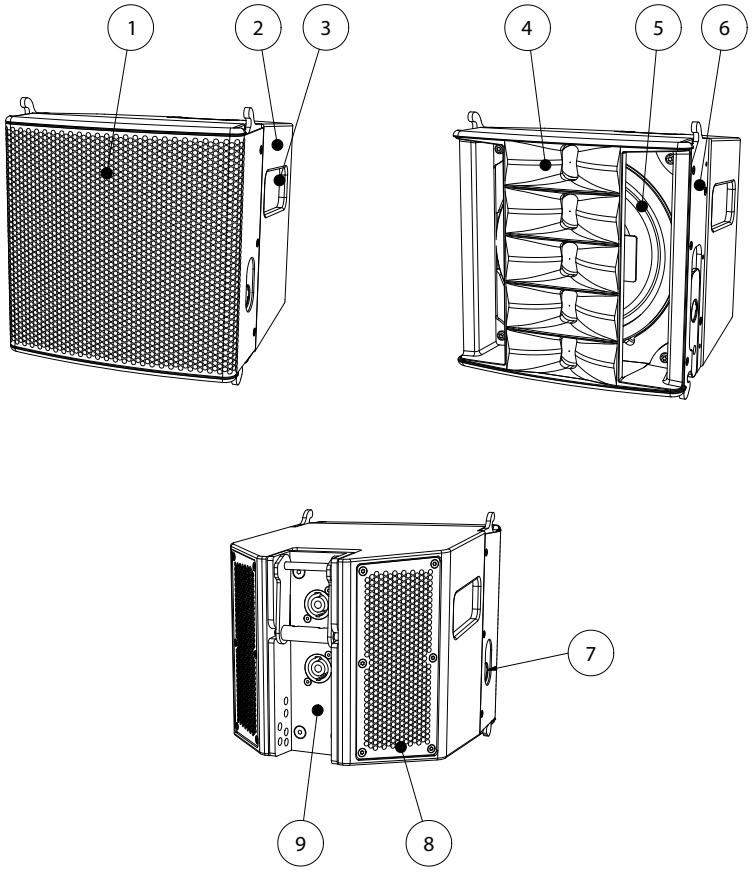

Figure 2.1 - Overview

1. Front grill
2. 15 mm Multiplex enclosure - Warnex surface finish
3. Carrying handle (2 pieces)
4. HF-array with five 1,0“ dome tweeters
5. 6,5“ cone driver
6. Rigging track (2 pieces)
7. Front lock (left and right)
8. Cardio grill (2 pieces)
9. Rear rigging ELLA6 with type labeling and splay angles

2.2 Rear rigging ELLA6

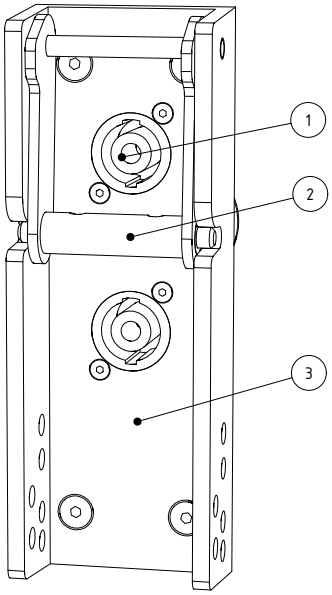

Figure 2.2.1 - Rear rigging

1. SpeakON® socket (2 pieces)
2. Latch
3. Rear rigging profile

Figure 2.2.2 - Rear rigging with logo, product data and splay angles

NOTE

Please note that the rear rigging profile is only available in the color black and the latch only in the color silver.

2.3 HF-Array

The ELLA6 loudspeaker is equipped with an HF-array with a nominal horizontal coverage of 120° and nominal vertical coverage of 10°.

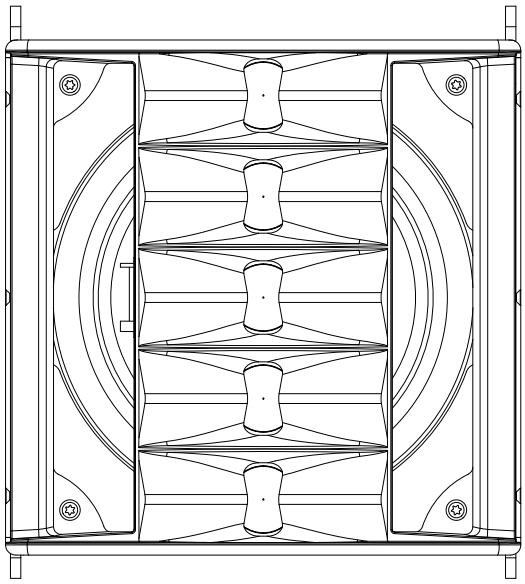

Figure 2.3 - HF-array

NOTE

The HF-array can only be replaced completely in case of damage. In this case please contact our service. (service@twaudio.com)

3. Technical specifications

3.1 Data sheet

Drivers	1x 6,5“ LF / 5x 1,0“ HF
Frequency response	90-20000 Hz
Power handling (program/Peak)	400 W / 800 W
Impedance	24 Ω
Coverage (h x v)	120° x 10°
Max. SPL / 1m	129 dB
Dimensions (h x w x d)	200 x 200 x 260 mm [7,9 x 7,9 x 10,2 in]
Weight	5,5 kg [12 lbs]
Surface	Warnex textured paint

3.2 Connection diagram

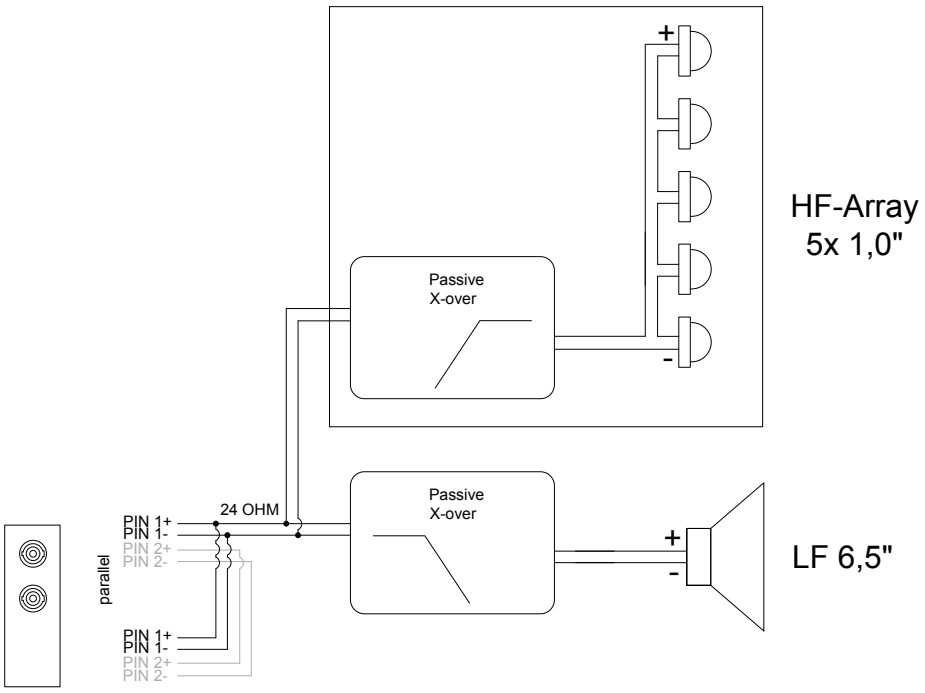

Figure 3.2 - Connection diagram

4. Commissioning

4.1 Setup

The ELLA6 loudspeaker has been designed for horizontal operation in stacked and flown vertical arrays. TW AUDiO provides a wide range of accessories to securely attach the loudspeaker.

WARNING

Make sure that all system structures are located on a firm, level surface and that the surface can bear the total weight!

WARNING

Make sure the speakers are securely fastened to prevent personal injury and property damage.

NOTE

TW AUDiO recommends using only the accessories specified by TW AUDiO for securing and mounting loudspeakers.

NOTE

Using the ELLA6 loudspeaker in bad weather conditions is not recommended. Although the speaker grilles are covered with water-repellent materials, moisture can penetrate the speaker in heavy and prolonged rain. This may affect the proper operation of the speakers.

Ensure that the ELLA6 speakers can dry out after each use in damp conditions in a dry, well-ventilated place. When doing so, the speakers must be removed from the case to provide adequate ventilation.

4.2 Rigging ELLA6

ELLA6-system line arrays include ELLA6 loudspeakers.

WARNING

Note that the ELLA6 loudspeakers are mechanically connected. This can be done quite easily by the fully integrated three point rigging.

NOTE

Please refer to the ELLA6-system rigging manual for operating modes and set-up options.

TIP

EASE Focus simulation software can be used to plan ELLA6 line arrays. EASE Focus is available as a free download from the TW AUDiO website at www.twaudio.com.

4.3 Operation

Operation of the ELLA6 loudspeaker requires a DSP-Controller. For this purpose, only presets developed by TW AUDiO are recommended. The TW AUDiO system racks are ideally suited for this purpose.

NOTE

Before connecting the loudspeaker to the amplifier, ensure that the right preset has been loaded.

Using a wrong, out dated or a preset not provided by TW AUDiO can lead to destruction of the speaker.

NOTE

Make sure that the amplifier's specifications meet the requirements. Using an amplifier that doesn't meet the specifications can destroy the loudspeaker.

Please note the technical data in section 3.1 on page 10.

4.4 Connecting the cable

To create a cable connection with an amplifier rack from TW AUDiO, proceed as follows.

NOTE

Ensure that the cable cross sectional area is sufficient (at least 1.5 mm²) to avoid power losses. TW AUDiO recommends using the loudspeaker cables available from TW AUDiO.

When connecting the cables to the loudspeaker, ensure that polarity (+/-) and pin assignment (1/2) are correct. Incorrect connection can lead to a significant change in the loudspeaker's sound characteristics and may damage the driver.

The pin connections of the ELLA6 loudspeaker can be found in section 3.2 ("Connection diagram") on page 10.

The internal wiring of the ELLA6 loudspeaker allows for parallel connection of multiple loudspeaker units.

Please note that parallel connections will decrease the total impedance of your loudspeaker configuration.

The total impedance and the resulting power of the speaker configuration must match the output power of the amplifier.

5. Transport and Storage

NOTE

To enable a single person to transport up to twelve ELLA6 loudspeakers, TW AUDiO recommends using the CaseELLA6.

When transporting and storing the unit, it is important to ensure that the surface and front grill of the loudspeaker are not damaged. Moisture can penetrate through exposed wood surfaces and cause the wood to swell. A bent or broken front grill will no longer adequately protect the sensitive speaker membranes.

In addition, appreciable dust deposits may considerably impair the functionality of a loudspeaker membrane. For this reason, the loudspeakers should be transported and stored in a safe, careful, dry and largely dust-free manner.

The following accessory parts for transport and storage are available from TW AUDiO:

- CaseELLA6 (case)
- Bag3E6 (bag)

The original packaging is unsuitable as permanent storage and transport packaging.

6. CE Conformity Declaration

Copy and translation of the original CE Conformity Declaration:

We hereby declare that the below-referenced components by virtue of their design and construction, and in the configuration placed on the market by us, satisfy the safety and health requirements of the applicable EC directives. This declaration becomes invalid in case of modifications that have not been approved by us.

This declaration applies to the following components

- ELLA6

as well as all model variants based on these, provided that they correspond to the original factory models and have not been technically modified in any way.

Applicable directives:

- 2001/95/EG
- 2011/65/EU

Applicable national standards and technical specifications:

- DIN EN 18 800
- DIN EN ISO 12 100
- DGUV Vorschrift 17 und 18
- EN 50581: 2013-02

Ludwigsburg, Germany, January 1st, 2021

Bernhard Wüstner

7. Disposal

It is prohibited to dispose of used electrical equipment with household refuse.

All TW AUDiO INTERNATIONAL GmbH products are so-called B2B-products. This means that they are sold by a commercial business to a commercial business. TW AUDiO products that bear the trash can symbol shown here may only be disposed of by TW AUDiO.

The loudspeaker owner is legally responsible for proper disposal of used devices that do not bear this symbol. This pertains to all products delivered prior to March 29, 2010. Nevertheless, TW AUDiO will also be happy to assist you in this case.

If you have any question regarding the disposal of used devices, please contact us under the following telephone number:

+49 (0) 71 41 - 48 89 89 0

Thus, TW AUDiO is in strict compliance with the Waste Electrical and Electronic Equipment Directive (2012/19/EU) for the protection of our environment.

TW AUDiO INTERNATIONAL is registered under the following WEEE-reg.-no. with the German National Register EAR as a B2B-manufacturer and distributor of electrical devices:

DE93295191

In countries outside of the European Union, comply with local regulations.

TW AUDiO INTERNATIONAL GmbH
Osterholzallee 140-2
71636 Ludwigsburg
Germany

Phone: + 49 (0) 71 41-48 89 89 0
Fax: + 49 (0) 71 41-48 89 89 99
E-Mail: info@twaudio.de
WWW: www.twaudio.de