TWAUDiO®

CBT24

Assembly Instructions

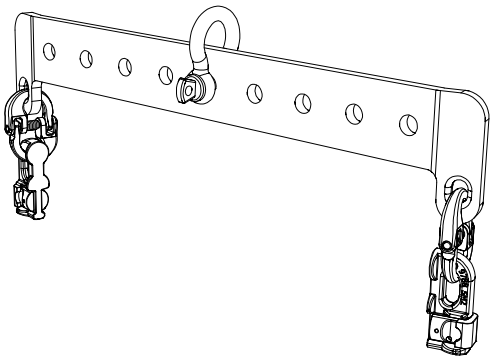

Introduction

Thank you for choosing a high-quality product “MADE IN GERMANY” from the brand TW AUDiO.

The cradle bar for flying CBT24 is an accessory for the T24(N) loudspeaker.

It is characterized by a subtle look, a remarkable size to weight ratio and ease of use.

If you lend your product to another party, inform that party of the safety-related operating procedures and hand over this assembly guide. If you require additional copies of this manual, you can obtain them free of charge from TW AUDiO or download them from www.twaudio.de

Instructions in this user manual

Strictly adhere to the instructions contained in this operating manual that are marked as follows:

This symbol in combination with the signal word “Warning” identifies a potentially hazardous situation. Failure to comply with this safety instruction can lead to serious injury or even death.

This symbol in combination with the signal word “Caution” identifies a potentially hazardous situation. Failure to comply with this safety instruction can lead to light or moderate injury.

This symbol in combination with the signal word “Note” identifies a potentially hazardous situation. Failure to comply with this safety instruction can lead to product damage.

This symbol in combination with the signal word “Tip” identifies additional information or notes that will simplify working with TW AUDiO products on the basis of practical experience.

Notes on the products

Read manual before use!

Before using the device, carefully read the assembly instructions and keep it with the CBT24 cradle bar for flying.

General information

Assembly instructions: OM-CBT24
Version 3.0 en, 02/2026
© by TW AUDiO INTERNATIONAL GmbH 2026; all rights reserved.

All information contained in this operating manual was correct to the best of our knowledge at the time of printing.

Quality warranties or assurance of suitability for a certain type of use based on the technical specifications, dimensions and weights are not granted by TW AUDiO.

TW AUDiO also shall not assume liability for any secondary damage (property damage and/or personal injury) nor for the failure to comply with this operating manual!

TW AUDiO reserves the right to update this document based on recent developments.

TW AUDiO INTERNATIONAL GmbH
Osterholzallee 140-2
71636 Ludwigsburg
Germany

Phone : + 49 (0) 71 41-48 89 89 0
Fax: + 49 (0) 71 41-48 89 89 99
E-Mail: info@twaudio.de
WWW: www.twaudio.de

Content

1. Safety | Intended use 5
2. Overview 7
2.1 Components 7
3. Technical data 8
3.1 Data sheet 8
4. Commissioning 9
4.1 Setup 9
4.2 Wind load 9
4.3 General safety instructions for setting up the following rigging variants: 10
4.4 Direction of mounting CBT24 cradle bar for flying to T24(N) loudspeaker 11
4.5 Variant 1: CBT24 at 1x T24(N) loudspeacker - no possibility to angle 12
4.6 Variant 2: CBT24 at 1x T24(N) loudspeaker - angled with degree numbers 13
4.7 Standard and maximum variant 14
4.8 MCT24 Main-cradle-frame 16
5. Transport and storage 18
6. CE Conformity Declaration 19
7. Disposal 19

1. Safety | Intended use

Please adhere to the following safety instructions to avoid risks when using accessories.

The CBT24 cradle bar for flying was developed for use in professional sound systems. The cradle bar for flying may only be used by trained and qualified personnel.

Note the operating modes described in this assembly instructions. Other uses are not permissible.

Damage caused by improper use is not covered by TW AUDiO.

WARNING

Before every operation, check the scope of delivery of the CBT24 cradle bar for flying for its completeness and ensure that all parts are in perfect condition.

WARNING

The CBT24 cradle bar for flying may only used with the T24(N) loudspeaker.

This rigging manual describes how to use the CBT24 cradle bar for flying correctly. Any other use shall be deemed improper and may result in damage or even injury.

Modifications or alterations to individual parts of the CBT24 cradle bar for flying are not permitted! Danger to life!

CAUTION

The CBT24 cradle bar for flying is designed both for indoor and outdoor use.

WARNING

The CBT24 cradle bar for flying may only be used by trained and qualified personnel. Personnel must check the CBT24 cradle bar for flying for suitability before each use.

WARNING

The CBT24 cradle bar for flying must be taken out of operation immediately as soon as visible damage to the parts can be seen.

WARNING

Please keep all elements of the CBT24 cradle bar for flying away from children! The small parts can easily be swallowed and lead to suffocation!

NOTE

When working with heavy loads exceeding 20 kg (44 lbs.), use suitable aids (dollies, hoisting slings, etc.). Multiple persons may be required depending on the situation.

WARNING

The payload of the CBT24 cradle bar for flying is designed of not more than six T24(N) loudspeaker. The following additional components are required for this: BCT24 rigging adapter, BBT24 bracket and BLT24 Boxlink connecting cables on both sides of the T24(N) loudspeaker. Do not exceed this payload.

WARNING

Check the Double Stud connections each time you install the CBT24 cradle bar for flying. They must be firmly engaged and secured with a safety locking splint. If this is no longer possible, the Double Stud connections with the safety locking splints must be replaced.

WARNING

Before mounting the CBT24 cradle bar for flying check that e.g. ceilings are capable to carrying the payload of the components.

WARNING

Make sure that no water pipes, electrical lines or any other lines are behind the intended place of mounting.

WARNING

Only use wall plugs and screws which are suitable for the intended mounting and structural fabric. All screws must be set and tightened properly. Ensure that the fixing holes have the correct depth and diameter. Always use all fixing holes.

WARNING

When moving (assembling, dismantling, maintaining) the CBT24 cradle bar for flying with T24(N) loudspeaker, ensure sufficient space to prevent collisions with other objects.

CAUTION

Do not squeeze or twist the electrical cables of the T24(N) loudspeaker during the installation of the CBT24 cradle bar for flying! The respective national electrotechnical rules and regulations are applicable.

2. Overview

2.1 Components

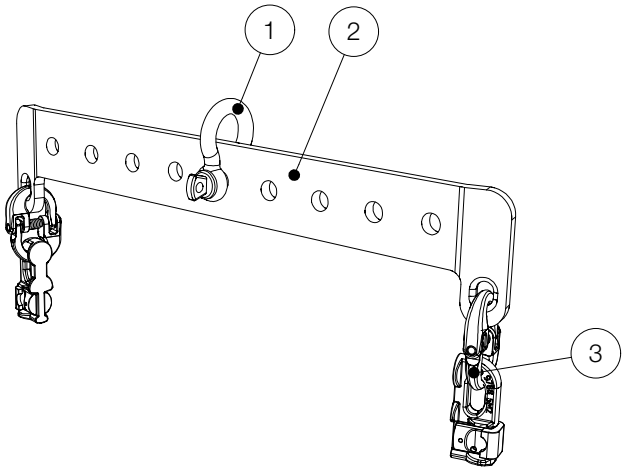

Figure 2.1 - Overview

1. Shackle SK10 ..... 1 piece
2. Cradle bar for flying ..... 1 piece
3. SAF-connector with Double Stud + splint ..... 2 pieces

3. Technical data

3.1 Data sheet

Maximum load capacity: (without other rigging components)	1x T24(N)
Maximum load capacity: in combination with: 1x BCT24 rigging adapter and 1x BBT24 bracket	1x T24(N)
Maximum load capacity: in combination with: 1x BCT24 rigging adapter, 6x BBT24 bracket and 10x BLT24 Boxlink-connecting cables on both sides of the T24(N) loudspeakers	6x T24(N)
Dimensions (h x w x d)	404 x 78 x 15 mm [15.91 x 3.07 x 0.59 in]
Weight	1,7 kg [3.75 lbs]
Surface	Powder-coated

4. Commissioning

4.1 Setup

The CBT24 cradle bar for flying is designed for hanging operation. TW AUDiO provides a wide range of accessories to securely attach the cradle bar for flying.

WARNING

Please note that setting up the CBT24 cradle bar for flying always requires two persons!

NOTE

TW AUDiO recommends using only the accessories specified by TW AUDiO for securing and mounting loudspeakers.

4.2 Wind load

WARNING

Before setting up the system outdoors, consider unexpected wind conditions at the operation site!

Disassemble your system immediately when wind speeds exceed 8 bft (34 to 40 kn / 62 to 74 kph / 38.5 to 46 mph) and secure the system components!

Make sure that there are no persons in the immediate vicinity of the system structure!

WARNING

Make sure that the system structures are not operated over the audience at wind speeds in excess of 6 bft (22 to 27 kn / 39 to 49 kph / 24.2 to 30.45 mph) and that there are no persons in the immediate vicinity of the system structure!

4.3 General safety instructions for setting up the following rigging variants:

WARNING

Use a shackle that is designed according to the payload for each system setup.

WARNING

Fasten the CBT24 cradle bar for flying with a shackle and chain hoist according to the middle pin point.

NOTE

For the secondary safety component, the respective national electrotechnical regulations apply.

WARNING

Attach this secondary safety component by using one furthermore shackle, chain sling or chain hoist on another pin point.

WARNING

Any influences on your system setup, such as leaning against objects (or people) and flying objects around, be refrained from!

4.4 Direction of mounting CBT24 cradle bar for flying to T24(N) loudspeaker

WARNING

Mount the CBT24 cradle bar for flying to the T24(N) loudspeaker as shown in figure 4.4.

WARNING

Observe the mounting direction of the CBT24 cradle bar for flying! It can be mounted only in this direction!

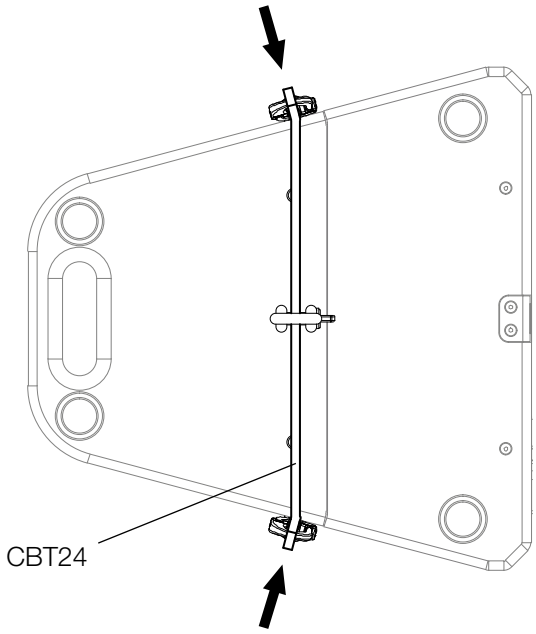

Figure 4.4 - Direction of mounting CBT24 to T24(N) loudspeaker

WARNING

Snap all Double Studs firmly into the flight panels of the T24N loudspeakers! Secure all Double Studs with the safety locking splints attached to safety wire ropes!

WARNING

Check that all Double Studs are engaged and that they have been secured with safety locking splints!

4.5 Variant 1: CBT24 at 1x T24(N) loudspeacker - no possibility to angle

NOTE

Note that with this variant 1 there is no possibility to specifically angle the T24(N) loudspeaker with fixed degrees.

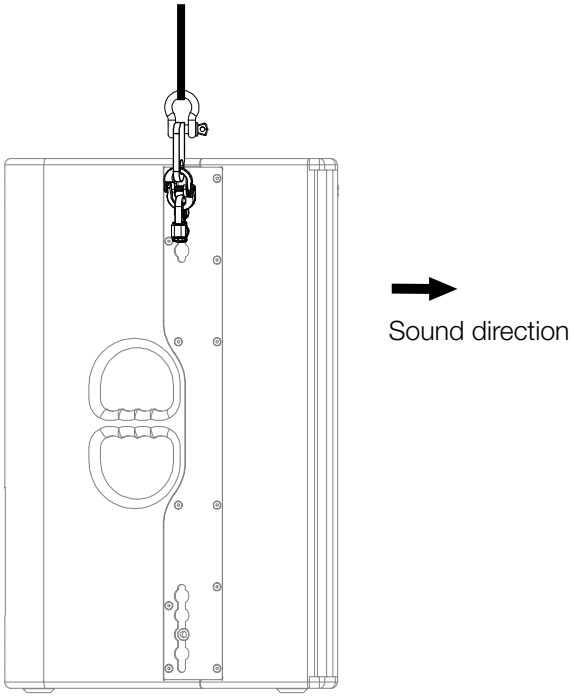

Figure 4.4.2 - Sound direction variant 1

Shall be angled anyway:

WARNING

To angle the T24(N) loudspeaker, mount a tension strap, safety rope, etc. on the bottom handle. Here you can angle only by feel.

4.6 Variant 2: CBT24 at 1x T24(N) loudspeaker - angled with degree numbers

WARNING

Note that to angle the T24(N) loudspeaker, the CBT24 cradle bar for flying can only be used in combination with the BCT24 rigging adapter as well as the BBT24 bracket for suspending the T24(N) loudspeaker!

NOTE

Use the simulation software EASE Focus to determine the degree of the T24(N) loudspeaker which matches your application, and the appropriate pin point of the BCT24 rigging adapter.

WARNING

Be sure to follow the work order below:

1. Mount the BCT24 rigging adapter to the CBT24 cradle bar for flying as described in the BCT24 rigging adapter assembly instructions. Also observe the safety instructions of the BCT24 rigging adapter!
2. Then mount both to the T24(N) loudspeaker using the Double Studs on both sides.
3. Before mounting the BBT24 bracket, observe its assembly and safety instructions!

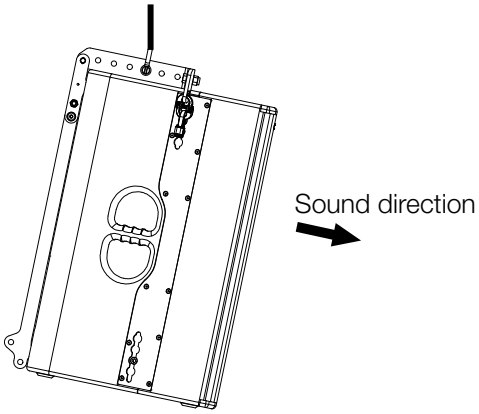

Figure 4.6 - Sound direction variant 2

WARNING

Snap all Double Studs firmly into the flight panels of the T24(N) loudspeakers! Secure all Double Studs with the safety locking splints attached to safety wire ropes!

WARNING

Check that all Double Studs are engaged and that they have been secured with safety locking splints!

WARNING

Check that all quick-locking pins are always completely inserted!

4.7 Standard and maximum variant

NOTE

The standard variant has established itself in which two T24(N) loudspeakers are used with one CBT24 cradle bar for flying, one BCT24 rigging adapter, two BBT24 brackets and two BLT24 Boxlink connector cables. (See figure 4.7)

NOTE

Use the simulation software EASE Focus to determine the number and degrees, the speaker of the T24(N)-system which matches your application, and the appropriate pin point of the BCT24 rigging adapter.

WARNING

Mount a maximum of six T24(N) loudspeakers one below the other. Be sure to follow the work order below:

1. Mount the BCT24 rigging adapter to the CBT24 cradle bar for flying as described in the BCT24 rigging adapter assembly instructions. Also observe the safety instructions of the BCT24 rigging adapter!

2. Then mount both at the upper T24(N) loudspeaker with the help of the Double Studs on both sides.

3. Before mounting the BBT24 bracket, observe its assembly and safety instructions!

4. Now connect a maximum of six T24(N) loudspeakers to each other using the BBT24 brackets (6 pieces) and the BLT24 Boxlink connector cables (10 pieces). The BLT24 boxlink connector cables each on both sides of the T24(N) loudspeakers.

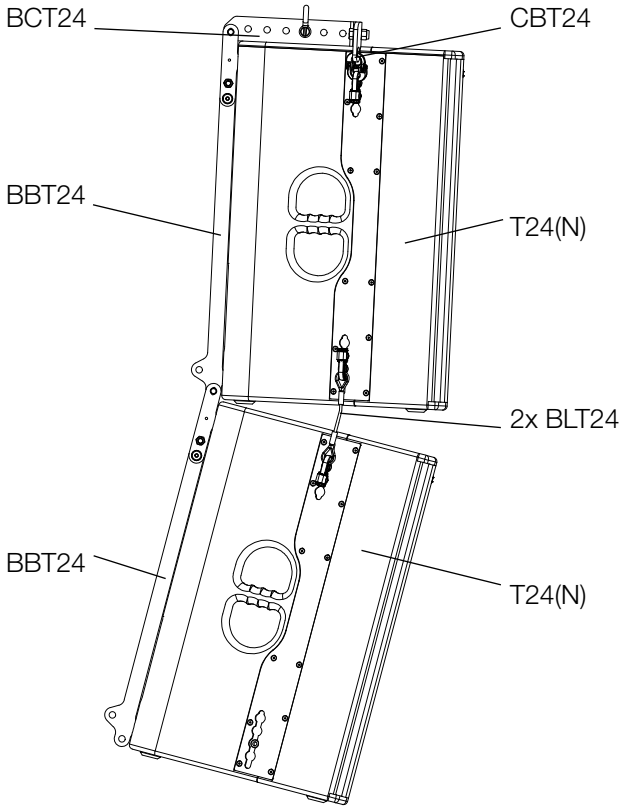

Figure 4.7 - Standard variant

WARNING

Snap all Double Studs firmly into the flight panels of the T24(N) loudspeakers! Secure all Double Studs with the safety locking splints attached to safety wire ropes!

WARNING

Check that all Double Studs are engaged and that they have been secured with safety locking splints!

WARNING

Check that all quick-locking pins are always completely inserted!

WARNING

Connect a maximum of six T24(N) loudspeakers to each other using the BBT24 brackets (6 pieces) and the BLT24 Boxlink connector cables (10 pieces). The BLT24 Boxlink connector cables on both sides of the T24(N) loudspeakers.

4.8 MCT24 Main-cradle-frame

If it is necessary to hang several system setups of the T24(N) loudspeakers next to each other as a cluster, the MCT24 main-cradle-frame is required.

Be sure to follow the mounting sequence below to mount the T24(N) loudspeakers to the MCT24 main-cradle-frame via the CBT24 cradle bar for flying:

WARNING

1. Attach the shackle of the CBT24 cradle bar for flying to another pin point with another shackle designed according to the total weight.
2. Before mounting the BAT24 adapter, observe its assembly and safety instructions!
3. Before mounting the BBT24 bracket, observe its assembly and safety instructions!
4. Now connect the BBT24 bracket with the BAT24 adapter via the upper locking pin of the BBT24 bracket!

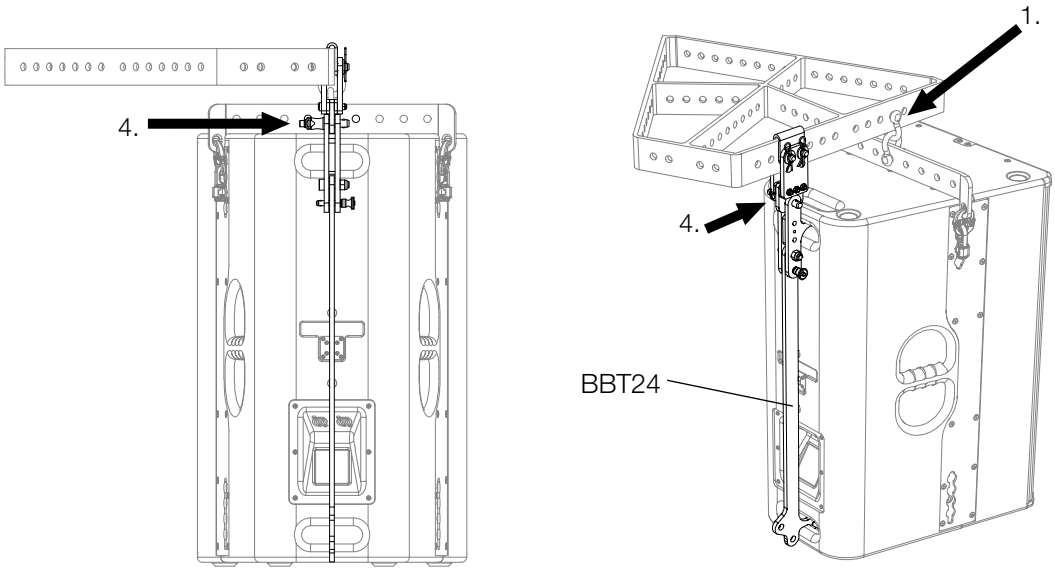

Figure 4.8.1 - Mounting T24(N) at MCT24 with CBT24 and BAT24

WARNING

Check that all quick-locking pins are always completely inserted!

WARNING

Check that all Double Studs are engaged and that they have been secured with safety locking splints!

WARNING

Attach the ASK sling chain to four other pin points on the MCT24 main-cradle-frame for each system setup. Use a sling chain or chain hoist to hang the ASK sling chain with the system setup.

NOTE

The standard variant has established itself in which two T24(N) loudspeakers are used with one CBT24 cradle bar for flying, two BBT24 brackets, one BAT24 adapter and two BLT24 Boxlink connector cables. (See figure 4.8.2)

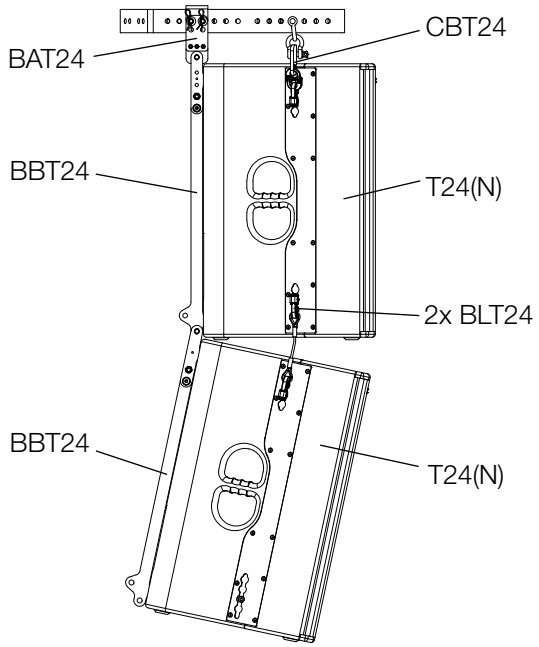

Figure 4.8.2 - Standard variant

WARNING

Connect a maximum of six T24(N) loudspeakers to each other using the BBT24 brackets (6 pieces) and the BLT24 Boxlink connector cables (10 pieces). The BLT24 Boxlink connector cables on both sides of the T24(N) loudspeakers.

5. Transport and storage

NOTE

Ensure that the surface of the cradle bar for flying is not damaged during transport and storage. Moisture may penetrate where steel surfaces are exposed by scratches and result in corrosion.

This is why the product should be transported in a safe, careful, dry and largely dust-free manner.

The following accessory parts for the cradle bar for flying are available from TW AUDiO:

- Shackle SK10
- SAF-connector with Double Stud and splint
- Boxlink connector wire rope BLT24
- Suspension chain ASK4

The original packaging is unsuitable as permanent storage and transport packaging.

6. CE Conformity Declaration

Copy and translation of the original CE Conformity Declaration:

We hereby declare that the below-referenced components by virtue of their design and construction, and in the configuration placed on the market by us, satisfy the safety and health requirements of the applicable EC directives. This declaration becomes invalid in case of modifications that have not been approved by us.

This declaration applies to the following components

• CBT24

as well as all model variants based on these, provided that they correspond to the original factory models and have not been technically modified in any way.

Applicable directives:

• 2001/95/EG

Applicable national standards and technical specifications:

• DIN EN 18 800
• DIN EN ISO 12 100
• DGUV Vorschrift 17 und 18

Ludwigsburg, Germany, January 1st, 2021

Bernhard Wüstner

7. Disposal

If you have any question regarding the disposal of used devices, please contact us under the following telephone number:

+49 (0) 71 41 - 48 89 89 0

In countries outside of the European Union, comply with local regulations.

TW AUDiO INTERNATIONAL GmbH
Osterholzallee 140-2
71636 Ludwigsburg
Germany

Phone: + 49 (0) 71 41-48 89 89 0
Fax: + 49 (0) 71 41-48 89 89 99
E-Mail: info@twaudio.de
WWW: www.twaudio.de