TWAUDiO®

# BCT24

## Assembly Instructions

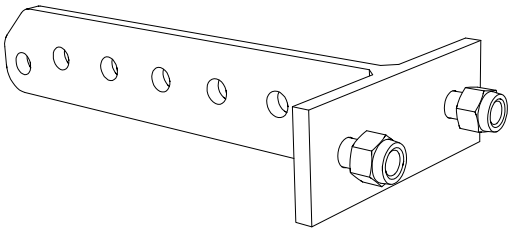

# Introduction

Thank you for choosing a high-quality product “MADE IN GERMANY” from the brand TW AUDiO.

The rigging adapter BCT24 is an accessory for the T24(N) loudspeaker.

It is characterized by a subtle look, a remarkable size to weight ratio and ease of use.

If you lend your product to another party, inform that party of the safety-related operating procedures and hand over this assembly guide. If you require additional copies of this manual, you can obtain them free of charge from TW AUDiO or download them from www.twaudio.de

## Instructions in this user manual

Strictly adhere to the instructions contained in this operating manual that are marked as follows:

This symbol in combination with the signal word “Warning” identifies a potentially hazardous situation. Failure to comply with this safety instruction can lead to serious injury or even death.

This symbol in combination with the signal word “Caution” identifies a potentially hazardous situation. Failure to comply with this safety instruction can lead to light or moderate injury.

This symbol in combination with the signal word “Note” identifies a potentially hazardous situation. Failure to comply with this safety instruction can lead to product damage.

This symbol in combination with the signal word “Tip” identifies additional information or notes that will simplify working with TW AUDiO products on the basis of practical experience.

## Notes on the products

**Read manual before use!**

Before using the device, carefully read the assembly instructions and keep it with the BCT24 rigging adapter.

## General information

Assembly instructions: OM-BCT24
Version 3.0 en, 02/2026
© by TW AUDiO INTERNATIONAL GmbH 2026; all rights reserved.

All information contained in this operating manual was correct to the best of our knowledge at the time of printing.

Quality warranties or assurance of suitability for a certain type of use based on the technical specifications, dimensions and weights are not granted by TW AUDiO.

TW AUDiO also shall not assume liability for any secondary damage (property damage and/or personal injury) nor for the failure to comply with this operating manual!

TW AUDiO reserves the right to update this document based on recent developments.

TW AUDiO INTERNATIONAL GmbH
Osterholzallee 140-2
71636 Ludwigsburg
Germany

Phone : + 49 (0) 71 41-48 89 89 0
Fax: + 49 (0) 71 41-48 89 89 99
E-Mail: info@twaudio.de
WWW: www.twaudio.de

# Content

1. Safety | Intended use ..... 5
2. Overview ..... 7
2.1 Components ..... 7
3. Technical data ..... 8
3.1 Data sheet ..... 8
4. Commissioning ..... 9
4.1 Setup ..... 9
4.2 Usage ..... 9
4.3 Wind load ..... 9
4.4 Mounting BCT24 rigging adapter at CBT24 cradle bar for flying ..... 10
4.5 System setup BCT24 with CBT24, BBT24 and T24(N) loudspeaker ..... 10
5. Transport and storage ..... 12
6. CE Conformity Declaration ..... 13
7. Disposal ..... 13

## 1. Safety | Intended use

Please adhere to the following safety instructions to avoid risks when using accessories.

The BCT24 rigging adapter was developed for use in professional sound systems. The rigging adapter may only be used by trained and qualified personnel.

Note the operating modes described in this assembly instructions. Other uses are not permissible.

Damage caused by improper use is not covered by TW AUDiO.

**WARNING**

Before every operation, check the scope of delivery of the BCT24 rigging adapter for its completeness and ensure that all parts are in perfect condition.

The scope of delivery includes specified components. Only use the recommended and certified components.

**WARNING**

The BCT24 rigging adapter may only used with the T24(N) loudspeaker.

This rigging manual describes how to use the BCT24 rigging adapter correctly. Any other use shall be deemed improper and may result in damage or even injury.

Modifications or alterations to individual parts of the BCT24 rigging adapter are not permitted! Danger to life!

**CAUTION**

The BCT24 rigging adapter is designed both for indoor and outdoor use.

**WARNING**

The BCT24 rigging adapter may only be used by trained and qualified personnel. Personnel must check the BCT24 rigging adapter for suitability before each use.

**WARNING**

The BCT24 rigging adapter must be taken out of operation immediately as soon as visible damage to the parts can be seen.

**WARNING**

Please keep all elements of the BCT24 rigging adapter away from children! The small parts can easily be swallowed and lead to suffocation!

**NOTE**

When working with heavy loads exceeding 20 kg (44 lbs.), use suitable aids (dollies, hoisting slings, etc.). Multiple persons may be required depending on the situation.

**WARNING**

The payload of the BCT24 rigging adapter is designed of not more than six T24(N) loudspeaker. The following additional components are required for this: CBT24 cradle bar for flying, BBT24 bracket and BLT24 Boxlink connecting cables on both sides of the T24(N) loudspeaker. Do not exceed this payload.

**WARNING**

All screw connections should be checked when the BCT24 rigging adapter is installed. If there are loose screws, tighten them. If this is no longer possible, the screws and nuts must be replaced.

**WARNING**

Whenever you make changes to the flown system, always use new hexagon screws (Item 2) and hexagon nuts (Item 3) as delivered with the product. These items are available from TW AUDiO.

**WARNING**

Before mounting the BCT24 rigging adapter check that e.g. trusses or ceilings are capable to carrying the payload of the components.

**WARNING**

Make sure that no water pipes, electrical lines or any other lines are behind the intended place of mounting.

**WARNING**

Only use wall plugs and screws which are suitable for the intended mounting and structural fabric. All screws must be set and tightened properly. Ensure that the fixing holes have the correct depth and diameter. Always use all fixing holes.

**WARNING**

When moving (assembling, dismantling, maintaining) the BCT24 rigging adapter with T24(N) loudspeaker, ensure sufficient space to prevent collisions with other objects.

**CAUTION**

Do not squeeze or twist the electrical cables of the T24(N) loudspeaker during the installation of the BCT24 rigging adapter! The respective national electrotechnical rules and regulations are applicable.

# 2. Overview

## 2.1 Components

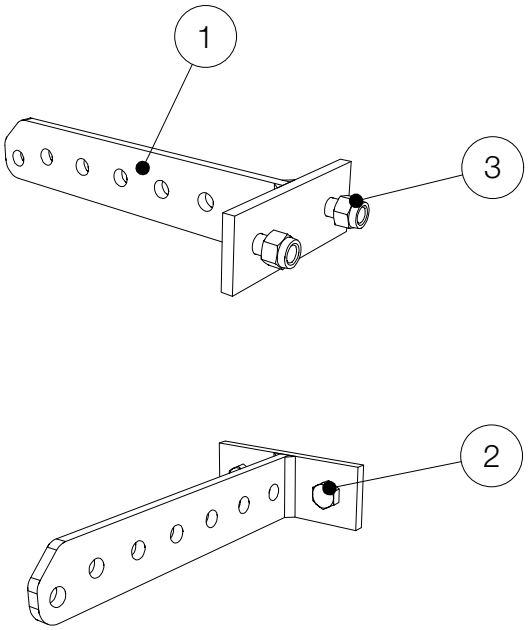


**Figure 2.1 - Overview**

1. Rigging adapter ..... 1 piece
2. Hexagon screw M12 x 30 ..... 2 pieces
3. Hexagon nut with clamping part M12 ..... 2 pieces

# 3. Technical data

## 3.1 Data sheet

| | |
|---|---|
| Maximum load capacity:<br><br>in combination with:<br>1x CBT24 cradle bar for flying and<br>1x BBT24 bracket | 1x T24(N) |
| Maximum load capacity:<br><br>in combination with:<br>1x CBT24 cradle bar for flying,<br>6x BBT24 bracket and<br>10x BLT24 Boxlink-connecting cab-<br>les on both sides of the<br>T24(N) loudspeakers | 6x T24(N) |
| Dimensions (h x w x d) | 126 x 260 x 48 mm [4.96 x 10.24 x 1.89 in] |
| Weight | 1,2 kg [2.65 lbs] |
| Surface | Powder-coated |

# 4. Commissioning

## 4.1 Setup

The BCT24 rigging adapter is designed for hanging operation. TW AUDiO provides a wide range of accessories to securely attach the rigging adapter.

**WARNING**

Please note that setting up the BCT24 rigging adapter always requires two persons!

**NOTE**

TW AUDiO recommends using only the accessories specified by TW AUDiO for securing and mounting loudspeakers.

## 4.2 Usage

**WARNING**

Note that the BCT24 rigging adapter can only be used in combination with the CBT24 cradle bar for flying as well as the BBT24 bracket for using the T24(N) loudspeaker!

## 4.3 Wind load

**WARNING**

Before setting up the system outdoors, consider unexpected wind conditions at the operation site!

Disassemble your system immediately when wind speeds exceed 8 bft (34 to 40 kn / 62 to 74 kph / 38.5 to 46 mph) and secure the system components!

Make sure that there are no persons in the immediate vicinity of the system structure!

**WARNING**

Make sure that the system structures are not operated over the audience at wind speeds in excess of 6 bft (22 to 27 kn / 39 to 49 kph / 24.2 to 30.45 mph) and that there are no persons in the immediate vicinity of the system structure!

## 4.4 Mounting BCT24 rigging adapter at CBT24 cradle bar for flying

**WARNING**

Mount the BCT24 rigging adapter to the CBT24 cradle bar for flying with both screws and nuts as shown in figure 4.4.

**WARNING**

Before mounting the CBT24 cradle bar for flying, observe its assembly and safety instructions!

**WARNING**

Check that both screws are tightly screwed with the nuts and cannot loosen!

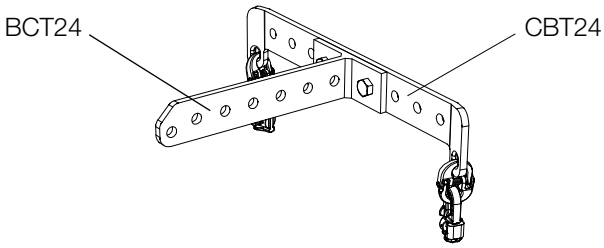


**Figure 4.4 - Mounting BCT24 rigging adapter at CBT24 cradle bar for flying**

## 4.5 System setup BCT24 with CBT24, BBT24 and T24(N) loudspeaker

**NOTE**

Use the simulation software EASE Focus to determine the number and degrees, the speaker of the T24(N)-system which matches your application, and the appropriate pin point of the BCT24 rigging adapter.

**WARNING**

Mount a maximum of six T24(N) loudspeakers one below the other. Be sure to follow the work order below:

1. Mount the BCT24 rigging adapter to the CBT24 cradle bar for flying as described in chapter 4.4.
2. Then mount both at the upper T24(N) loudspeaker with the help of the Double Studs on both sides.
3. Before mounting the BBT24 bracket, observe its assembly and safety instructions!
4. Now connect a maximum of six T24(N) loudspeakers to each other using the BBT24 bracket (6 pieces) and the BLT24 Boxlink connector cables (10 pieces). The BLT24 boxlink connector cables each on both sides of the T24(N) loudspeakers.

**WARNING**

Snap all Double Studs firmly into the flight panels of the T24N loudspeakers! Secure all Double Studs with the safety locking splints attached to safety wire ropes!

**WARNING**

Check that all Double Studs are engaged and that they have been secured with safety locking splints!

**WARNING**

Check that all quick-locking pins are always completely inserted!

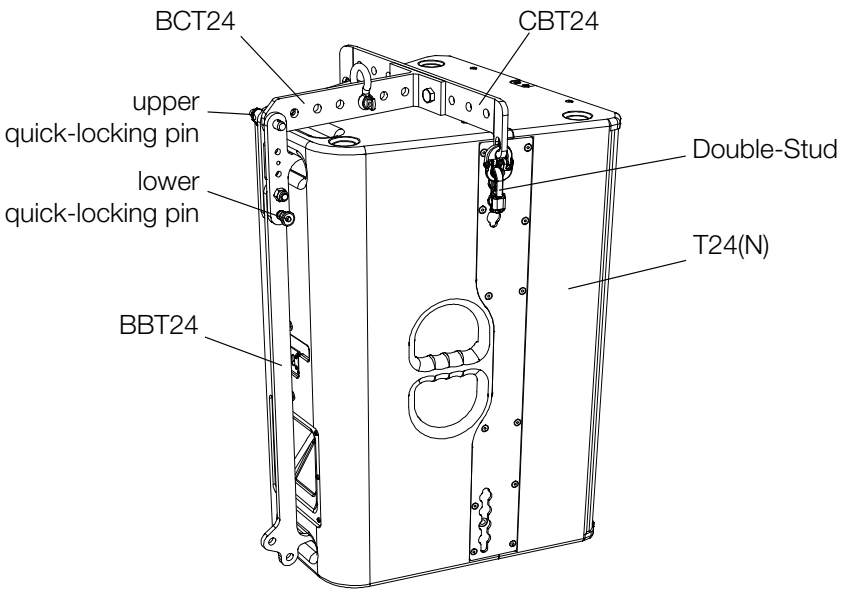


**Figure 4.5 - Mounting BCT24 rigging adapter with all assemblies**

General safety instructions for setting up this rigging variant:

**WARNING**

Use shackles that are designed according to the payload for each system setup.

**NOTE**

For the secondary safety component, the respective national electrotechnical regulations apply.

**WARNING**

Attach this secondary safety component by using two furthermore shackles, chain sling or chain hoist on two another pin points.

## 5. Transport and storage

NOTE

Ensure that the surface of the rigging adapter is not damaged during transport and storage. Moisture may penetrate where steel surfaces are exposed by scratches and result in corrosion.

This is why the product should be transported in a safe, careful, dry and largely dust-free manner.

The following accessory parts for the rigging adapter are available from TW AUDiO:

- Hexagon screw M12 x 30
- Hexagon nut M12

The original packaging is unsuitable as permanent storage and transport packaging.

## 6. CE Conformity Declaration

Copy and translation of the original CE Conformity Declaration:

We hereby declare that the below-referenced components by virtue of their design and construction, and in the configuration placed on the market by us, satisfy the safety and health requirements of the applicable EC directives. This declaration becomes invalid in case of modifications that have not been approved by us.

**This declaration applies to the following components**

• BCT24

as well as all model variants based on these, provided that they correspond to the original factory models and have not been technically modified in any way.

**Applicable directives:**

• 2001/95/EG

**Applicable national standards and technical specifications:**

• DIN EN 18800
• DIN EN ISO 12100
• DGUV Vorschrift 17 und 18

Ludwigsburg, Germany, January 1st, 2021

Bernhard Wüstner

## 7. Disposal

If you have any question regarding the disposal of used devices, please contact us under the following telephone number:

+49 (0) 71 41 - 48 89 89 0

In countries outside of the European Union, comply with local regulations.

TW AUDiO INTERNATIONAL GmbH
Osterholzallee 140-2
71636 Ludwigsburg
Germany

Phone: + 49 (0) 71 41-48 89 89 0
Fax: + 49 (0) 71 41-48 89 89 99
E-Mail: info@twaudio.de
WWW: www.twaudio.de