TWAUDiO®

BBT24

Assembly Instructions

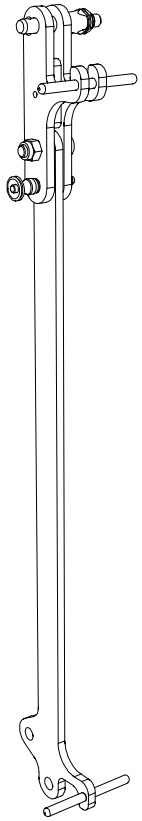

Introduction

Thank you for choosing a high-quality product “MADE IN GERMANY” from the brand TWAUDiO.

The bracket BBT24 is an accessory for the T24(N) loudspeaker.

It is characterized by a subtle look, a remarkable size to weight ratio and ease of use.

If you lend your product to another party, inform that party of the safety-related operating procedures and hand over this assembly guide. If you require additional copies of this manual, you can obtain them free of charge from TWAUDiO or download them from www.twaudio.de

Instructions in this user manual

Strictly adhere to the instructions contained in this operating manual that are marked as follows:

This symbol in combination with the signal word “Warning” identifies a potentially hazardous situation. Failure to comply with this safety instruction can lead to serious injury or even death.

This symbol in combination with the signal word “Warning” identifies a potentially hazardous situation. Failure to comply with this safety instruction can lead to serious injury or even death.

This symbol in combination with the signal word “Caution” identifies a potentially hazardous situation. Failure to comply with this safety instruction can lead to light or moderate injury.

This symbol in combination with the signal word “Note” identifies a potentially hazardous situation. Failure to comply with this safety instruction can lead to product damage.

This symbol in combination with the signal word “Tip” identifies additional information or notes that will simplify working with TWAUDiO products on the basis of practical experience.

Notes on the products

Read manual before use!

Before using the device, carefully read the assembly instructions and keep it with the BBT24 bracket.

General information

Assembly instructions: OM-BBT24
Version 3.0 en, 02/2026
© by TW AUDiO INTERNATIONAL GmbH 2026; all rights reserved.

All information contained in this operating manual was correct to the best of our knowledge at the time of printing.

Quality warranties or assurance of suitability for a certain type of use based on the technical specifications, dimensions and weights are not granted by TW AUDiO.

TW AUDiO also shall not assume liability for any secondary damage (property damage and/or personal injury) nor for the failure to comply with this operating manual!

TW AUDiO reserves the right to update this document based on recent developments.

TW AUDiO INTERNATIONAL GmbH
Osterholzallee 140-2
71636 Ludwigsburg
Germany

Phone : + 49 (0) 71 41-48 89 89 0
Fax: + 49 (0) 71 41-48 89 89 99
E-Mail: info@twaudio.de
WWW: www.twaudio.de

Content

1. Safety | Intended use 5
2. Overview 7
2.1 Components 7
3. Technical data 8
3.1 Data sheet 8
4. Commissioning 9
4.1 Setup 9
4.2 Use without or with MCT main cradle frame 9
4.3 Wind load 9
4.4 Preparing BBT24 bracket 10
4.5 Preparing T24(N) loudspeaker 11
4.6 Mounting step 1 - BBT24 bracket 12
4.7 Mounting step 2 - BBT24 bracket 12
4.8 Mounting step 3 - BBT24 bracket 13
4.9 General safety instructions for setting up the following rigging variants 13
4.10 Variant: 1x BBT24 bracket with 1x T24(N) loudspeaker 14
4.11 Standard as well as maximum Variant 15
5. Transport and storage 16
6. CE Conformity Declaration 17
7. Disposal 17

1. Safety | Intended use

Please adhere to the following safety instructions to avoid risks when using accessories.

The BBT24 bracket was developed for use in professional sound systems. The bracket may only be used by trained and qualified personnel.

Note the operating modes described in this assembly instructions. Other uses are not permissible.

Damage caused by improper use is not covered by TW AUDiO.

WARNING

Before every operation, check the scope of delivery of the BBT24 bracket for its completeness and ensure that all parts are in perfect condition.

The scope of delivery includes specified components. Only use the recommended and certified components.

WARNING

The BBT24 bracket may only used with the T24(N) loudspeaker.

This rigging manual describes how to use the BBT24 bracket correctly. Any other use shall be deemed improper and may result in damage or even injury.

Modifications or alterations to individual parts of the BBT24 bracket are not permitted! Danger to life!

CAUTION

The BBT24 bracket is designed both for indoor and outdoor use.

WARNING

The BBT24 bracket may only be used by trained and qualified personnel. Personnel must check the BBT24 bracket for suitability before each use.

WARNING

The BBT24 bracket must be taken out of operation immediately as soon as visible damage to the parts can be seen.

WARNING

Please keep all elements of the BBT24 bracket away from children! The small parts can easily be swallowed and lead to suffocation!

WARNING

When assembling and disassembling your system setups, make sure that you never carelessly remove the quick-locking pins of the BBT24 bracket with your fingers, hands or other body parts or reach between the speakers. Due to the gravity of the upper part, it can fall backwards or forwards.
There is a danger of crushing!

NOTE

When working with heavy loads exceeding 20 kg (44 lbs.), use suitable aids (dollies, hoisting slings, etc.). Multiple persons may be required depending on the situation.

WARNING

The payload of the BBT24 bracket is designed of not more than six T24(N) loudspeaker. The following additional components are required for this: CBT24 cradle bar for flying, BCT24 rigging adapter and BLT24 Boxlink connecting cables on both sides of the T24(N) loudspeaker. Do not exceed this payload.

WARNING

All screw connections should be checked when the BBT24 bracket is installed. If there are loose screws, tighten them. If this is no longer possible, the screws and nuts must be replaced.

WARNING

Before mounting the BBT24 bracket check that e.g. trusses or ceilings are capable to carrying the payload of the components.

WARNING

Make sure that no water pipes, electrical lines or any other lines are behind the intended place of mounting.

WARNING

Only use wall plugs and screws which are suitable for the intended mounting and structural fabric. All screws must be set and tightened properly. Ensure that the fixing holes have the correct depth and diameter. Always use all fixing holes.

WARNING

When moving (assembling, dismantling, maintaining) the BBT24 bracket with T24(N) loudspeaker, ensure sufficient space to prevent collisions with other objects.

CAUTION

Do not squeeze or twist the electrical cables of the T24(N) loudspeaker during the installation of the BBT24 bracket! The respective national electrotechnical rules and regulations are applicable.

2. Overview

2.1 Components

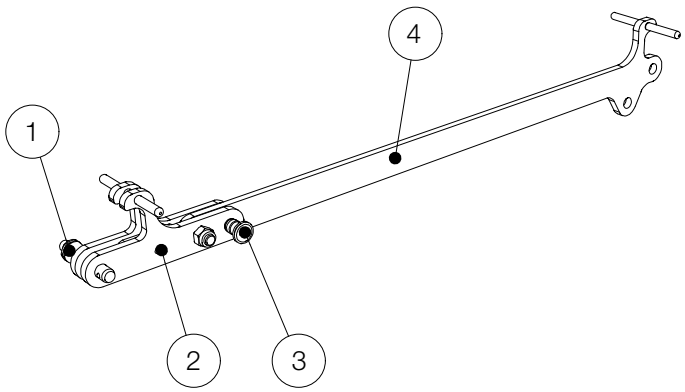

Figure 2.1 - Overview

1. Quick-locking pin 12 x 30 ..... 1 piece
2. Upper part, hinged ..... 1 piece
3. Quick-locking pin 8 x 30 ..... 1 piece
4. Track ..... 1 piece

3. Technical data

3.1 Data sheet

Maximum load capacity: for 1x BBT24 bracket in combination with: 1x CBT24 cradle bar for flying and 1x BCT24 rigging adapter	1x T24N
Maximum load capacity: for 6x BBT24 bracket in combination with: 1x CBT24 cradle bar for flying, 1x BCT24 rigging adapter and 10x BLT24 Boxlink-connecting cab- les on both sides of the T24(N) loudspeakers	6x T24N
Dimensions (w x h x d)	98 x 731 x 105 mm [3.86 x 28.78 x 4.13 in]
Weight	2,2 kg [4.85 lbs]
Surface	Powder-coated

4. Commissioning

4.1 Setup

The BBT24 bracket is designed for hanging operation. TW AUDiO provides a wide range of accessories to securely attach the bracket.

WARNING

Please note that setting up the BBT24 bracket always requires two persons!

NOTE

TW AUDiO recommends using only the accessories specified by TW AUDiO for securing and mounting loudspeakers.

4.2 Use without or with MCT main cradle frame

WARNING

Note that when used without the MCT24 main cradle frame, the BBT24 bracket can only be used in combination with the CBT24 cradle bar for flying as well as the BCT24 rigging adapter for using T24(N) speakers!

WARNING

Note that when used with the MCT24 main cradle frame, the BBT24 bracket can only be used in combination with the BAT24 adapter as well as the CBT24 cradle bar for flying for using T24(N) speakers!

4.3 Wind load

WARNING

Before setting up the system outdoors, consider unexpected wind conditions at the operation site!

Disassemble your system immediately when wind speeds exceed 8 bft (34 to 40 kn / 62 to 74 kph / 38.5 to 46 mph) and secure the system components!

Make sure that there are no persons in the immediate vicinity of the system structure!

WARNING

Make sure that the system structures are not operated over the audience at wind speeds in excess of 6 bft (22 to 27 kn / 39 to 49 kph / 24.2 to 30.45 mph) and that there are no persons in the immediate vicinity of the system structure!

4.4 Preparing BBT24 bracket

NOTE

Loosen both quick-locking pins on the upper part of the bracket and fold it open as shown in figure 4.4.

WARNING

When assembling and disassembling your system setups, make sure that you never carelessly remove the quick-locking pins of the BBT24 bracket with your fingers, hands or other body parts or reach between the speakers. Due to the gravity of the upper part, it can fall backwards or forwards.
There is a danger of crushing!

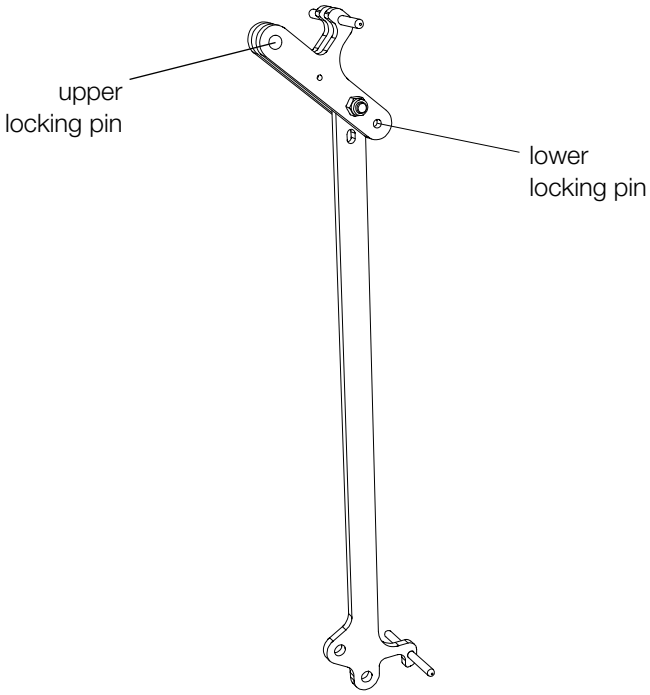

Figure 4.4 - Loosen the quick-locking pins

4.5 Preparing T24(N) loudspeaker

NOTE

Attach the CBT24 cradle bar for flying to the T24(N) loudspeaker, or to the top T24(N) loudspeaker in an array application, as shown in figure 4.5.

WARNING

Snap all Double Studs firmly into the flight panels of the T24N loudspeakers! Secure all Double Studs with the safety locking splints attached to safety wire ropes!

WARNING

Check that all Double Studs are engaged and that they have been secured with safety locking splints!

WARNING

Then mount the BCT24 rigging adapter to the CBT24 cradle bar for flying with both screws and nuts as described in the BCT24 rigging adapter assembly instructions.

WARNING

Check that both screws are tightly screwed to the nuts of the BCT24 rigging adapter and cannot loosen!

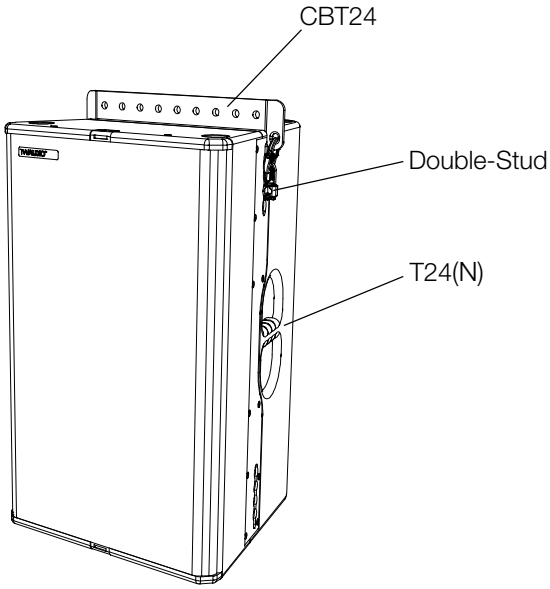

Figure 4.5 - Mounting CBT24 cradle bar for flying to T24(N) loudspeaker

4.6 Mounting step 1 - BBT24 bracket

NOTE

Place the T24(N) speaker on a non-slip surface and hook the BBT24 bracket into the lower handle of the T24(N) speaker as shown in figure 4.6.

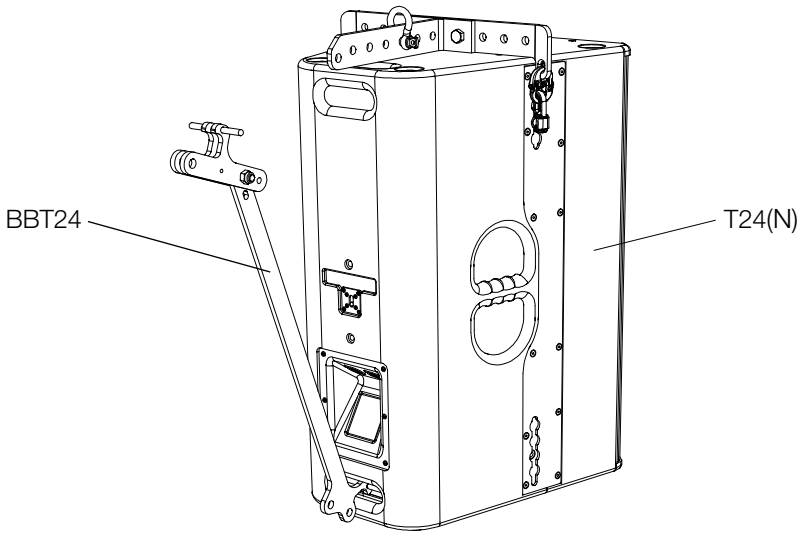

Figure 4.6 - Hooking the BBT24 bracket in the lower handle

4.7 Mounting step 2 - BBT24 bracket

NOTE

Fold the upper part of the BBT24 bracket forward and hook it with the hook in the upper handle of the T24(N) speaker as shown in figure 4.7.

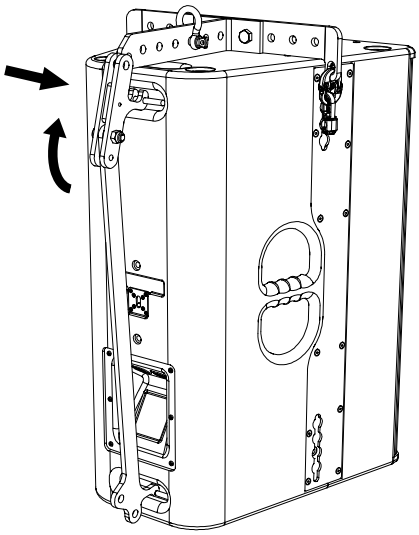

Figure 4.7 - Hooking the BBT24 bracket in the upper handle

4.8 Mounting step 3 - BBT24 bracket

WARNING

Re-insert the upper and lower quick-locking pins into the BBT24 bracket as shown in figure 4.8, thus locking the BBT24 bracket.

WARNING

Check that all quick-locking pins are always completely inserted!

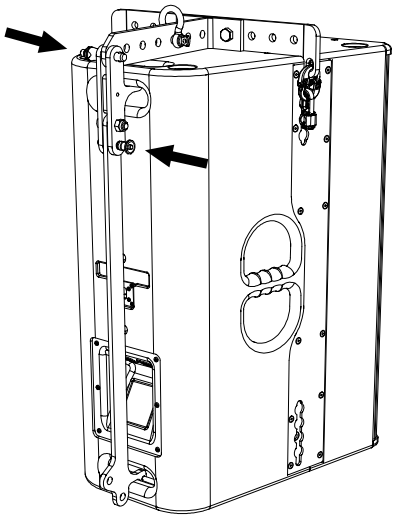

Figure 4.8 - Re-insert of the quick-locking pins

4.9 General safety instructions for setting up the following rigging variants

WARNING

Use shackles that are designed according to the payload for each system setup.

NOTE

For the secondary safety component, the respective national electrotechnical regulations apply.

WARNING

Attach this secondary safety component by using two furthermore shackles, chain sling or chain hoist on two another pin points.

4.10 Variant: 1x BBT24 bracket with 1x T24(N) loudspeaker

After you have carried out mounting step 3, the T24(N) loudspeaker can now be suspended. With the help of a shackle designed according to the total weight and attached to a pin point of the BCT24 rigging adapter, the T24(N) speaker can now be angled.

NOTE

Use the simulation software EASE Focus to determine the degree of the T24(N) loudspeaker which matches your application, and the appropriate pin point of the BCT24 rigging adapter.

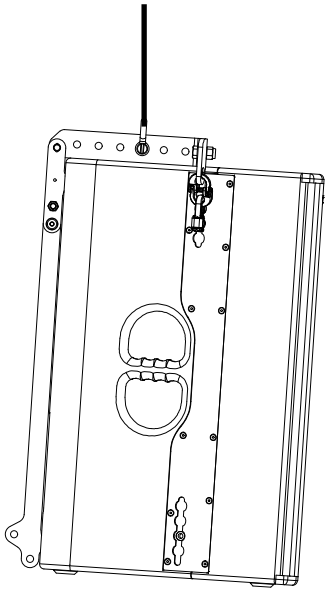

Figure 4.10 - Variant 1x BBT24 with T24(N) loudspeaker

WARNING

Any influences on your system setup, such as leaning against objects (or people) and flying objects around, be refrained from!

4.11 Standard as well as maximum Variant

NOTE

The standard variant has established itself in which two T24(N) loudspeakers are used with two BBT24 brackets, a CBT24 cradle bar for flying and a BCT24 rigging adapter. (See figure 4.11)

NOTE

Use the simulation software EASE Focus to determine the number and degrees of the T24(N) loudspeaker system which matches your application and the appropriate pin point of the BCT24 rigging adapter.

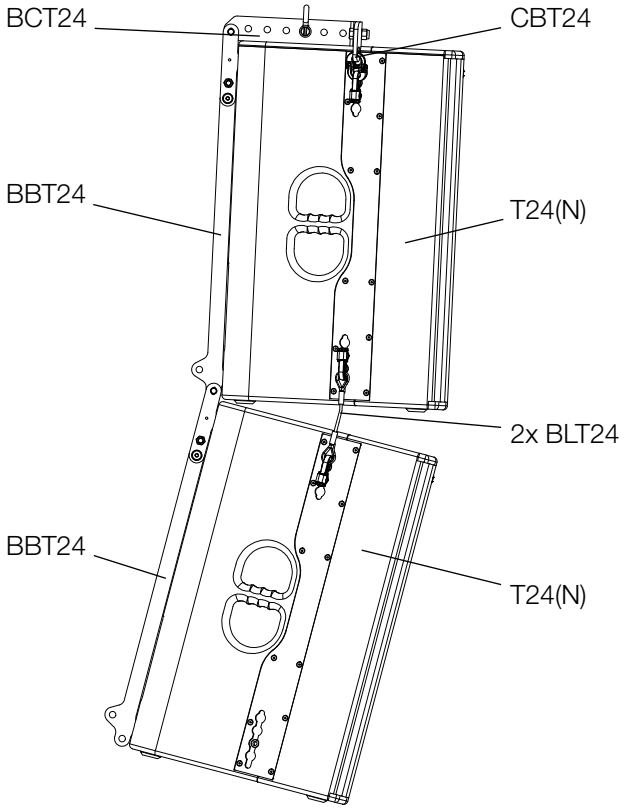

Figure 4.11 - Standard variant

WARNING

Connect a maximum of six T24(N) loudspeakers to each other using the BBT24 brackets (6 pieces) and the BLT24 Boxlink connector cables (10 pieces). The BLT24 Boxlink connector cables on both sides of the T24(N) loudspeakers.

WARNING

Any influences on your system setup, such as leaning against objects (or people) and flying objects around, be refrained from!

5. Transport and storage

NOTE

Ensure that the surface of the bracket is not damaged during transport and storage. Moisture may penetrate where steel surfaces are exposed by scratches and result in corrosion.

This is why the product should be transported in a safe, careful, dry and largely dust-free manner.

The following accessory parts for the bracket are available from TW AUDiO:

- Locking pin 8 x 30
- Locking pin 12 x 30
- Shoulder screw M10 x 25
- Hexagon nut M10

The original packaging is unsuitable as permanent storage and transport packaging.

6. CE Conformity Declaration

Copy and translation of the original CE Conformity Declaration:

We hereby declare that the below-referenced components by virtue of their design and construction, and in the configuration placed on the market by us, satisfy the safety and health requirements of the applicable EC directives. This declaration becomes invalid in case of modifications that have not been approved by us.

This declaration applies to the following components

• BBT24

as well as all model variants based on these, provided that they correspond to the original factory models and have not been technically modified in any way.

Applicable directives:

• 2001/95/EG

Applicable national standards and technical specifications:

• DIN EN 18800
• DIN EN ISO 12100
• DGUV Vorschrift 17 und 18

Ludwigsburg, Germany, January 1st, 2021

Bernhard Wüstner

7. Disposal

If you have any question regarding the disposal of used devices, please contact us under the following telephone number:

+49 (0) 71 41 - 48 89 89 0

In countries outside of the European Union, comply with local regulations.

TW AUDiO INTERNATIONAL GmbH
Osterholzallee 140-2
71636 Ludwigsburg
Germany

Phone: + 49 (0) 71 41-48 89 89 0
Fax: + 49 (0) 71 41-48 89 89 99
E-Mail: info@twaudio.de
WWW: www.twaudio.de