TWAUDIO®

B18

Operation manual

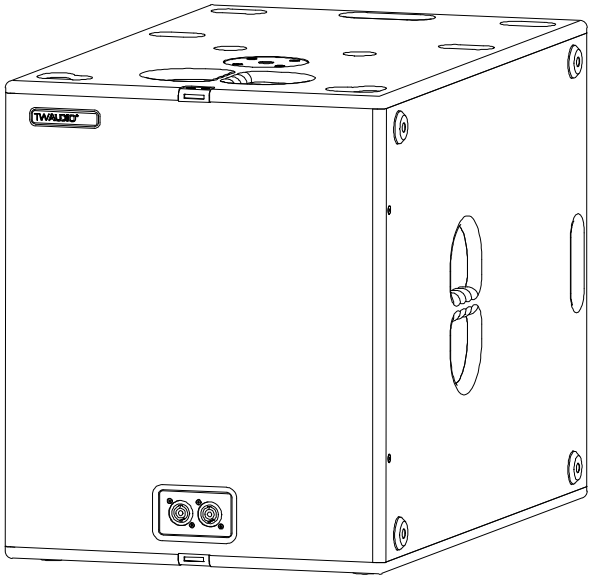

Introduction

Thank you for choosing a high-quality product “MADE IN GERMANY” from the brand TWAUDiO.

A desired child: the B18 loudspeaker.

Countless customer requests were the starting point for developing this loudspeaker. Featuring a symmetrical bandpass design, our B18 sounds astonishingly controlled but also very deep.

The fully symmetrical enclosure enables identical performance in all setup variants. In addition, directional sub arrays with partly reversed subwoofers are possible in all combinations without restrictions – whether upright or crosswise, stacked on top of each other or side-by-side. For simple and inconspicuous wiring of directional bass clusters such as these, the B18 provides two speakON® connectors on the front grill.

If you lend your product to another party, inform that party of the safety-related operating procedures and hand over this assembly guide. If you require additional copies of this manual, you can obtain them free of charge from TWAUDiO or download them from www.twaudio.de

Instructions in this user manual

Strictly adhere to the instructions contained in this operating manual that are marked as follows:

This symbol in combination with the signal word “Warning” identifies a potentially hazardous situation. Failure to comply with this safety instruction can lead to serious injury or even death.

This symbol in combination with the signal word “Warning” identifies a potentially hazardous situation for persons with a pacemaker. Failure to comply with this safety instruction can lead to serious injury or even death.

This symbol in combination with the signal word “Caution” identifies a potentially hazardous situation. Failure to comply with this safety instruction can lead to light or moderate injury.

This symbol in combination with the signal word “Note” identifies a potentially hazardous situation. Failure to comply with this safety instruction can lead to product damage.

TIP

This symbol in combination with the signal word “Tip” identifies additional information or notes that will simplify working with TW AUDiO products on the basis of practical experience.

Notes on the products

Read manual before use!

Before using the device, carefully read the operating manual and keep it with the B18 loudspeaker.

General information

Operation manual: OM-B18
Version 3.0 en, 02/2026
© by TW AUDiO INTERNATIONAL GmbH 2026; all rights reserved.

All information contained in this operating manual was correct to the best of our knowledge at the time of printing.

Quality warranties or assurance of suitability for a certain type of use based on the technical specifications, dimensions and weights are not granted by TW AUDiO.

TW AUDiO also shall not assume liability for any secondary damage (property damage and/or personal injury) nor for the failure to comply with this operating manual!

TW AUDiO reserves the right to update this document based on recent developments.

TW AUDiO INTERNATIONAL GmbH
Osterholzallee 140-2
71636 Ludwigsburg
Germany

Phone : + 49 (0) 71 41-48 89 89 0
Fax: + 49 (0) 71 41-48 89 89 99
E-Mail: info@twaudio.de
WWW: www.twaudio.de

Content

1. Safety | Intended use 5
2. Overview 7
2.1 Components 7
3. Technical specifications 8
3.1 Data sheet 8
3.2 Connection diagram 8
4. Commissioning 9
4.1 Setup 9
4.2 M20 pole mount flange 9
4.3 Operation 12
4.4 Connecting the cable 12
4.5 Possible vertical system setups 13
4.5.1 B18 loudspeaker on B18 loudspeaker 13
4.5.2 B30 loudspeaker on B18 loudspeaker 14
4.5.3 B15 loudspeaker on B18 loudspeaker 14
4.5.4 T24(N) loudspeaker on B18 loudspeaker 15
4.5.5 VERA L24 loudspeaker on B18 loudspeaker 15
4.6 Possible horizontal system setups 16
4.6.1 B18 loudspeaker laid on B18 loudspeaker 16
4.6.2 B30 loudspeaker on B18 loudspeaker 17
4.6.3 B15 loudspeaker on B30 loudspeaker 17
4.6.4 VERA S32 loudspeaker on B18 loudspeaker 18
5. Transport and Storage 19
6. CE Conformity Declaration 20
7. Disposal 21

1. Safety | Intended use

Please adhere to the following safety instructions to avoid risks when operating loudspeakers.

The B18 loudspeaker was developed for use in professional sound systems. The loudspeaker may only be used by trained and qualified personnel.

Note the operating modes described in this operating manual. Other uses are not permissible.

Damage caused by improper use is not covered by TW AUDiO.

WARNING

Loudspeakers generate an electromagnetic field. Persons with pacemakers are not permitted to remain in the immediate vicinity of loudspeakers as the electromagnetic fields can cause pacemakers to malfunction.

WARNING

When working with heavy loads exceeding 20 kg (44 lbs.), use suitable aids (dollies, hoisting slings, etc.). Multiple persons may be required depending on the situation.

Ensure that the units are in a stable position and are firmly attached. A falling loudspeaker can result in serious personal injury and property damage.

When using and assembling TW AUDiO loudspeakers, only use materials specified by TW AUDiO. These tasks must be performed by qualified personnel. Adhere to the applicable safety regulations.

NOTE

When setting up loudspeakers, ensure that they are not exposed to the following ambient conditions:

- Direct sunlight
- Humidity
- Jolting
- Dust

WARNING

Keep away from the immediate vicinity of loudspeakers that are operated at high sound pressure levels. These loudspeaker systems are capable of endangering your health. Sound levels beginning as low as approximately 90 dB SPL can lead to long-term hearing impairment.

NOTE

Avoid:

- Feedback
- Distorted signals (clipping) and
- Peaks resulting from switching on devices, plugging in devices or unplugging devices during operation.

Such signals can lead to loudspeaker overload and ultimately to loudspeaker failure.

WARNING

Ensure that the loudspeaker is not exposed to permanent thermal overloads. Thermal overloads may cause a fire and result in serious personal injury and property damage.

Note that TWAUDiO does not provide a warranty for damage that can be attributed to this type of overload and therefore cannot be held liable for any secondary damage.

NOTE

A permanent magnetic field is present in the immediate vicinity of loudspeakers. Ensure that objects which react sensitively to magnetic fields are not located in the immediate vicinity of the loudspeaker. In particular, this applies to magnetic storage media, magnetic stripe cards such as debit cards and CRT displays. A distance of approximately one meter is sufficient to avoid damage.

NOTE

Check loudspeakers and accessory parts regularly for visible wear. This is essential to ensure continuing fault-free operation. Worn parts should be replaced immediately. Spare parts are available from TWAUDiO.

2. Overview

2.1 Components

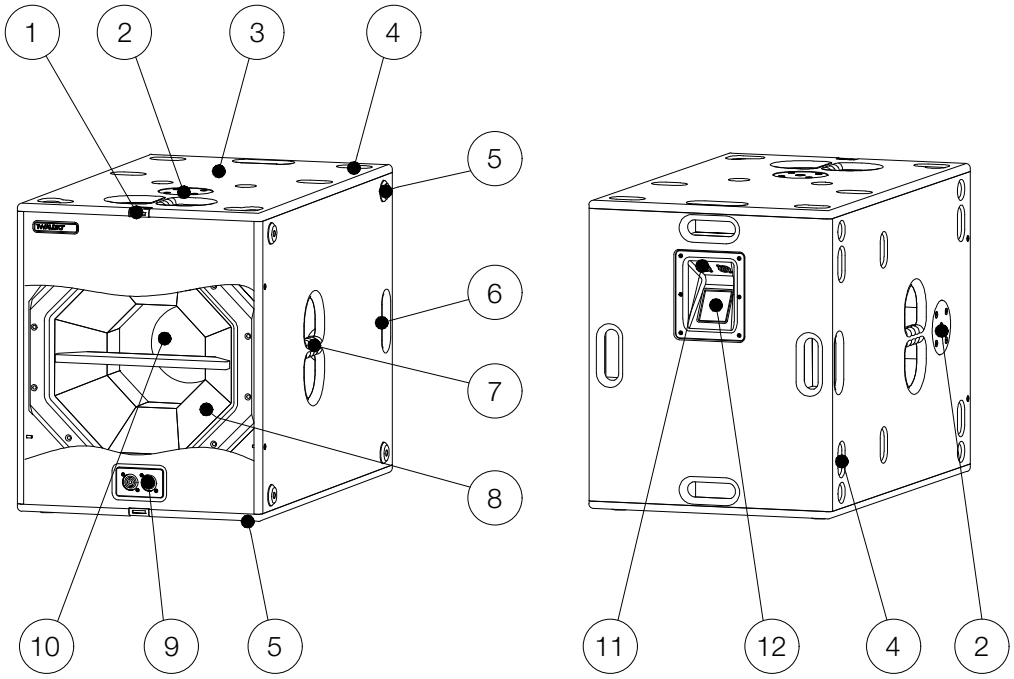

Figure 2.1 - Overview

1. Dolly latch base to attach the TWAUDiO B18 front dolly
2. M20 pole mount flange for attaching a distance rod
3. 15 mm multiplex housing – Warnex texture paint surface finish
4. Milling for rubber feet for safely stacking loudspeakers
5. Rubber feet (8 pieces)
6. Carrying handle (rear, top and bottom, left and right)
7. Ergonomic carrying handle (top and bottom, left and right)
8. Front lid of bandpass enclosure
9. speakON® front connection sockets
10. 18“ cone drivers
11. Standard connection panel
12. Type label

3. Technical specifications

3.1 Data sheet

Drivers	1x 18“ LF
Frequency response	32 - 160 Hz
Power handling (program/Peak)	2400 / 4800 W
Impedance	8 Ω
Max. SPL / 1 m	132 dB
Dimensions (h x w x d)	606 x 506 x 800 mm [23.9 x 20.0 x 31.5 in]
Weight	42,6 kg [94 lbs]
Surface	Polyurea-coated

3.2 Connection diagram

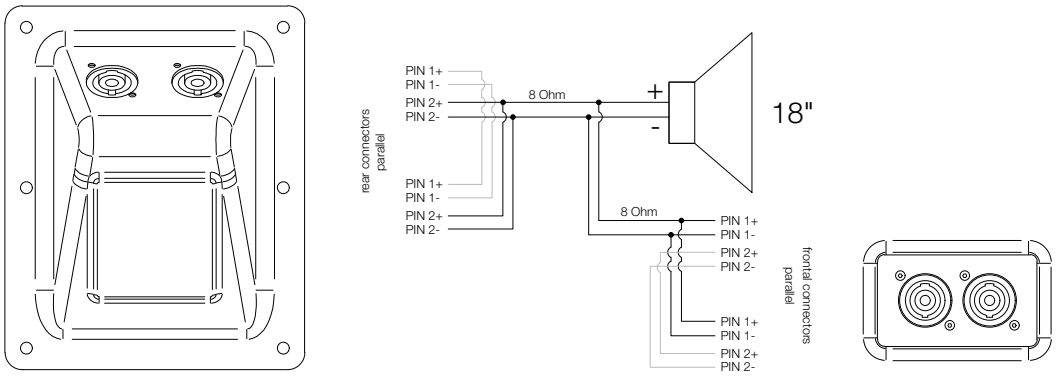

Figure 3.2 - Connection diagram

4. Commissioning

4.1 Setup

The B18 loudspeaker is designed for standing, vertikal and horizontal operation.

WARNING

Make sure that all system structures are located on a firm, level surface and that the surface can bear the total weight!

WARNING

Make sure the speakers are securely fastened to prevent personal injury and property damage. Secure stacked loudspeakers properly so that they can be tipped by 10° in any direction without toppling.

NOTE

TWAUDiO recommends using only the accessories specified by TWAUDiO for securing and mounting loudspeakers.

4.2 M20 pole mount flange

For all system components mounted on top of the M20 pole mount flange, observe the respective operating instructions!

Also be sure to observe all of the following warnings:

WARNING

Make sure that the maximum load of 50 kg / 110 lbs for the M20 pole mount flange is not exceeded! Figure 2.1 – Item 2.

WARNING

Make sure that no unauthorized persons can access the system structures!

Cordon off the area professionally!

WARNING

The M20 pole mount flange (figure 2.1- item 2) is not designed for side forces once mounted – do not apply any pressure from the sides.

Make sure that no external forces are applied to the system structures. No objects or persons should lean against the structures, no objects should be thrown against them. If pressure is applied on the flange the loudspeaker may be damaged or falling over.

WARNING

Before setting up the system outdoors, consider unexpected wind conditions at the operation site!

Disassemble your system immediately when wind speeds exceed 8 bft (34 to 40 kn / 62 to 74 kph / 38.5 to 46 mph) and secure the system components!

Make sure that there are no persons in the immediate vicinity of the system structure!

WARNING

Make sure that the system structures are not operated over the audience at wind speeds in excess of 6 bft (22 to 27 kn / 39 to 49 kph / 24.2 to 30.45 mph) and that there are no persons in the immediate vicinity of the system structure!

WARNING

Please note that only centered loads are allowed to be placed on the M20 pole mount flange – Figure 2.1 – Item 2.

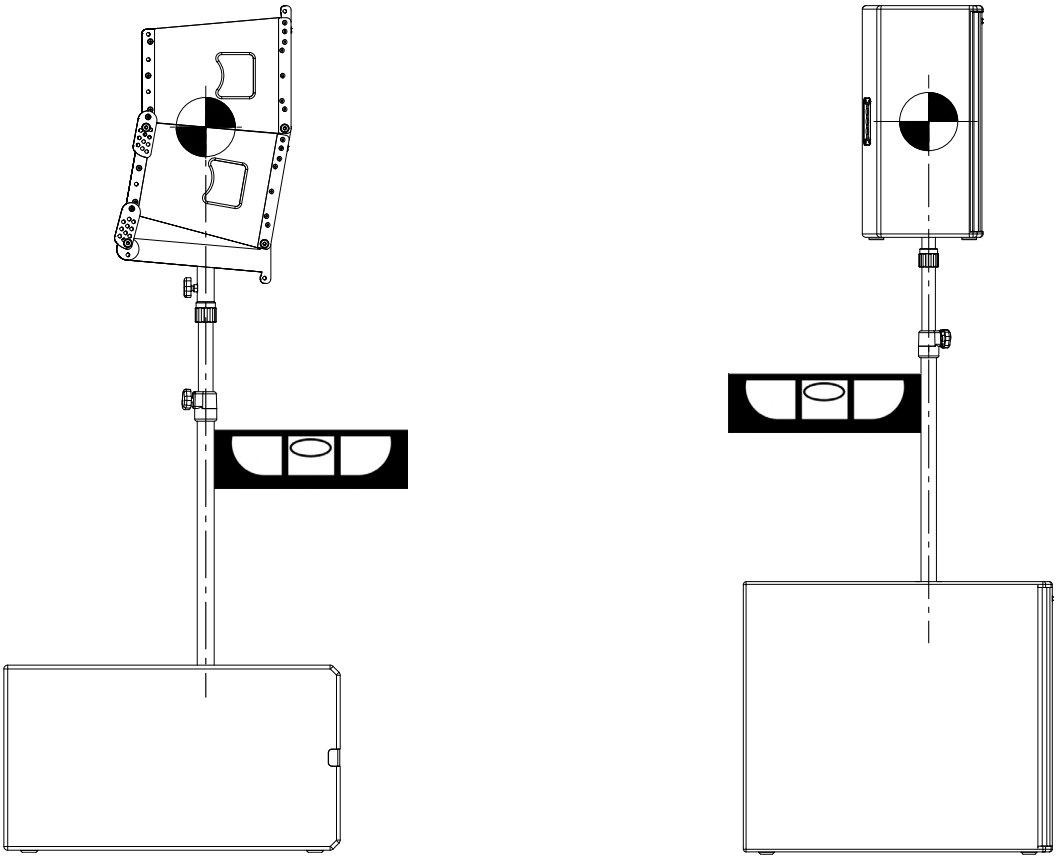

Figure 4.2.1 - system setup B18

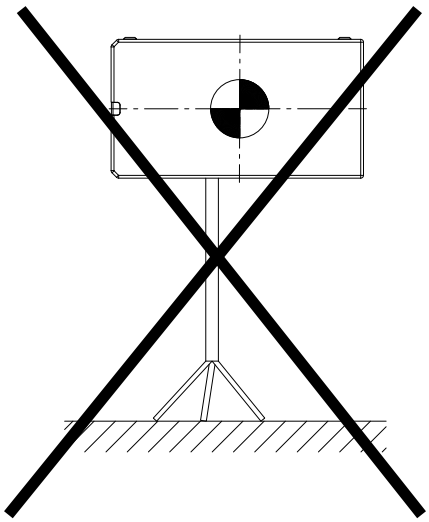

Figure 4.2.2 - B18 – improper installation

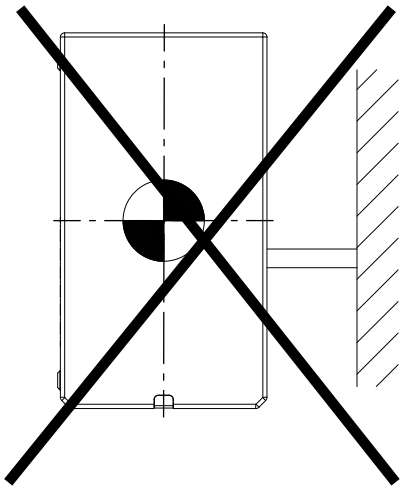

Figure 4.2.3 - B18 – improper wall mounting

4.3 Operation

Operation of the B18 speaker requires a DSP-Controller. For this purpose, only presets developed by TW AUDiO are recommended. The TW AUDiO system racks are ideally suited for this purpose.

NOTE

Before connecting the loudspeaker to the amplifier, ensure that the right preset has been loaded.

Using a wrong, out dated or a preset not provided by TW AUDiO can lead to destruction of the speaker.

NOTE

Make sure that the amplifier's specifications meet the requirements. Using an amplifier that doesn't meet the specifications can destroy the loudspeaker.

Please note the technical data in section 3.1 on page 8.

In Cardioid mode, the focus is on maximum sound pressure reduction behind the loudspeaker setup, with partial forward-facing level addition.

The rear speaker produces an inverted signal to cancel out sound components on the back. Depending on the distance between the loudspeakers and their transit time difference, there will be a frequency-dependent sound pressure level addition in front of the loudspeaker arrangement. By adjusting the transit time difference between the two individual drivers, a different dispersion pattern can be achieved.

4.4 Connecting the cable

To create a cable connection with an amplifier rack from TW AUDiO, proceed as follows.

NOTE

Ensure that the cable cross sectional area is sufficient (at least 1.5 mm^2) to avoid power losses. TW AUDiO recommends using the loudspeaker cables available from TW AUDiO.

When connecting the cables to the loudspeaker, ensure that polarity (+/-) and pin assignment (1/2) are correct. Incorrect connection can lead to a significant change in the loudspeaker's sound characteristics and may damage the driver.

The pin connections of the B18 loudspeaker can be found in section 3.2 ("Connection diagram") on page 8.

The internal wiring of the B18 loudspeaker allows for parallel connection of multiple loudspeaker units.

Please note that parallel connections will decrease the total impedance of your loudspeaker configuration.

The total impedance and the resulting power of the speaker configuration must match the output power of the amplifier.

HINWEIS

In Cardio Setup mode, the sound radiated toward the rear is reduced. Ensure that you have selected the correct preset for this setup. Incorrect connection results in a significant change in the loudspeaker sound characteristics and may cause damage.

4.5 Possible vertical system setups

Additional loudspeakers can be placed on top of the B18 loudspeaker in standing, vertical operation.

WARNING

Make sure that the existing millings for rubberfeets (Pos.4 - figure 2.1) are used for a safe stacking of the loudspeakers.

WARNING

Secure the stacked loudspeakers professionally so that a danger of tipping over can always be excluded under the given installation conditions and environmental parameters!

4.5.1 B18 loudspeaker on B18 loudspeaker

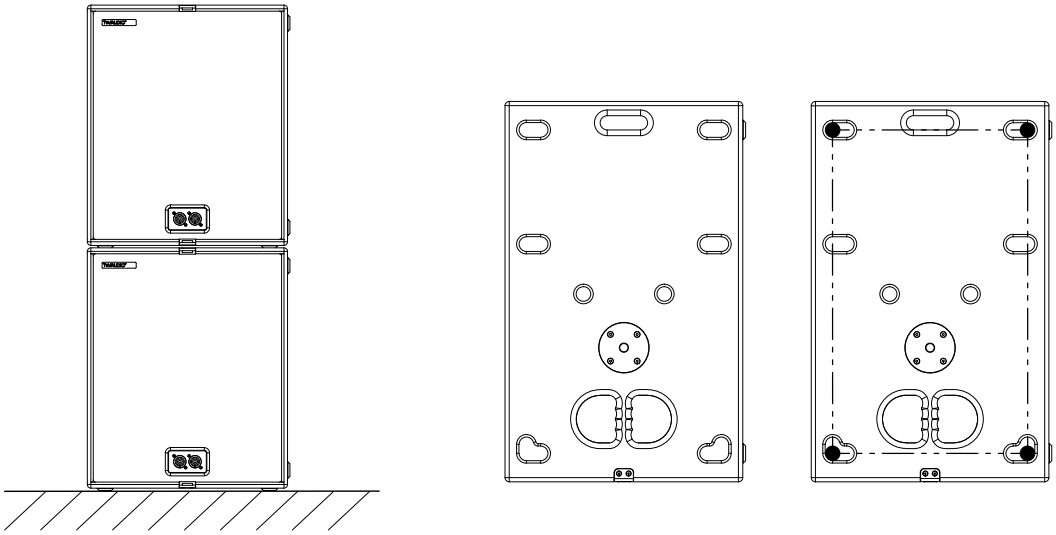

Figure 4.5.1 - B18 on B18 loudspeaker

4.5.2 B30 loudspeaker on B18 loudspeaker

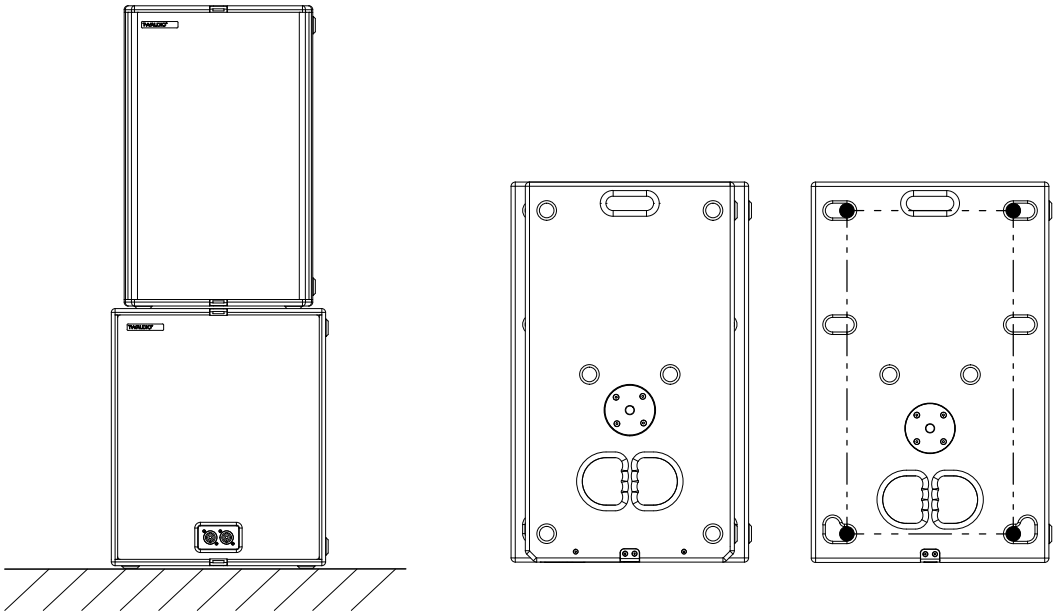

Figure 4.5.2 - B30 on B18 loudspeaker

4.5.3 B15 loudspeaker on B18 loudspeaker

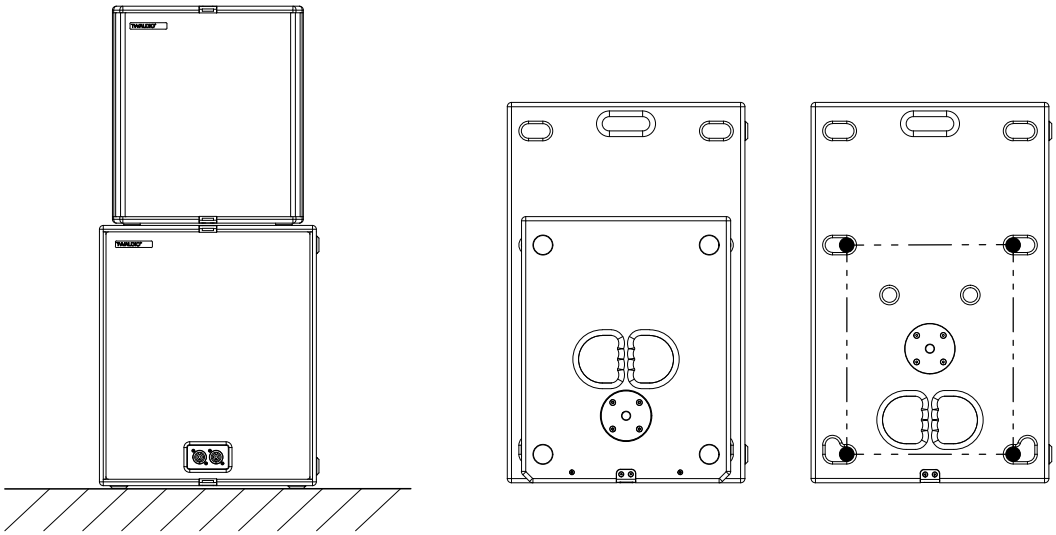

Figure 4.5.3 - B15 on B18 loudspeaker

4.5.4 T24(N) loudspeaker on B18 loudspeaker

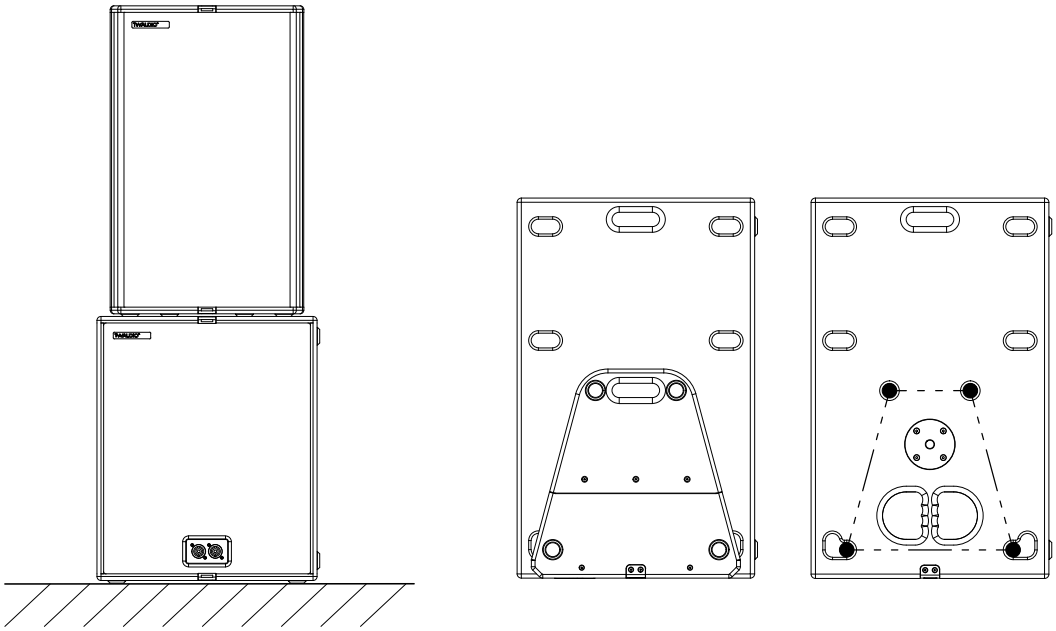

Figure 4.5.4 - T24(N) on B18 loudspeaker

4.5.5 VERA L24 loudspeaker on B18 loudspeaker

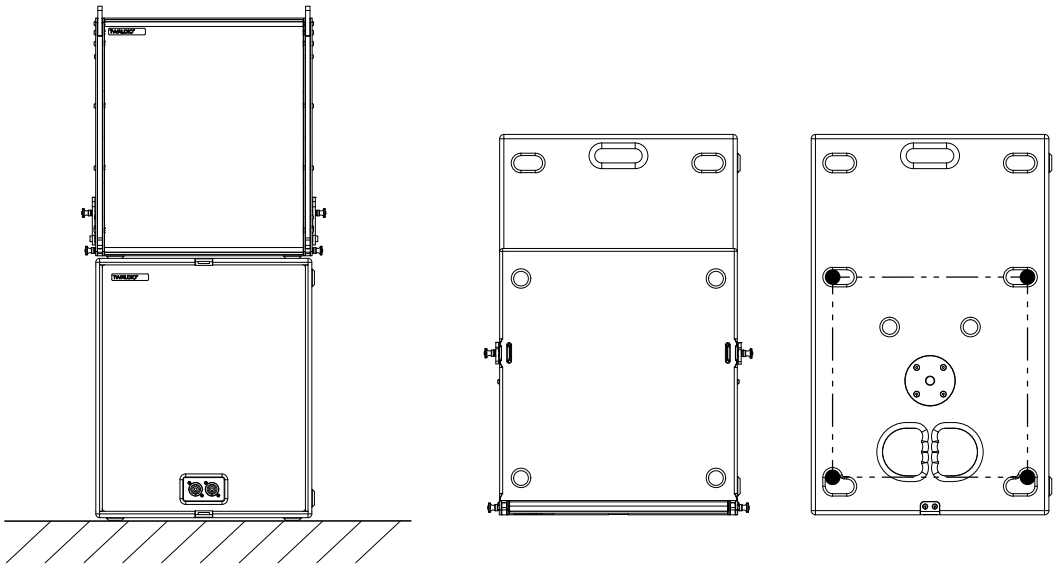

Figure 4.5.5 - VERA L24 on B18 loudspeaker

4.6 Possible horizontal system setups

Additional loudspeakers can be placed on top of the B18 loudspeaker in standing, horizontal operation.

WARNING

Make sure that the existing millings for rubberfeets (Pos.4 - figure 2.1) are used for a safe stacking of the loudspeakers.

WARNING

Secure the stacked loudspeakers professionally so that a danger of tipping over can always be excluded under the given installation conditions and environmental parameters!

4.6.1 B18 loudspeaker laid on B18 loudspeaker

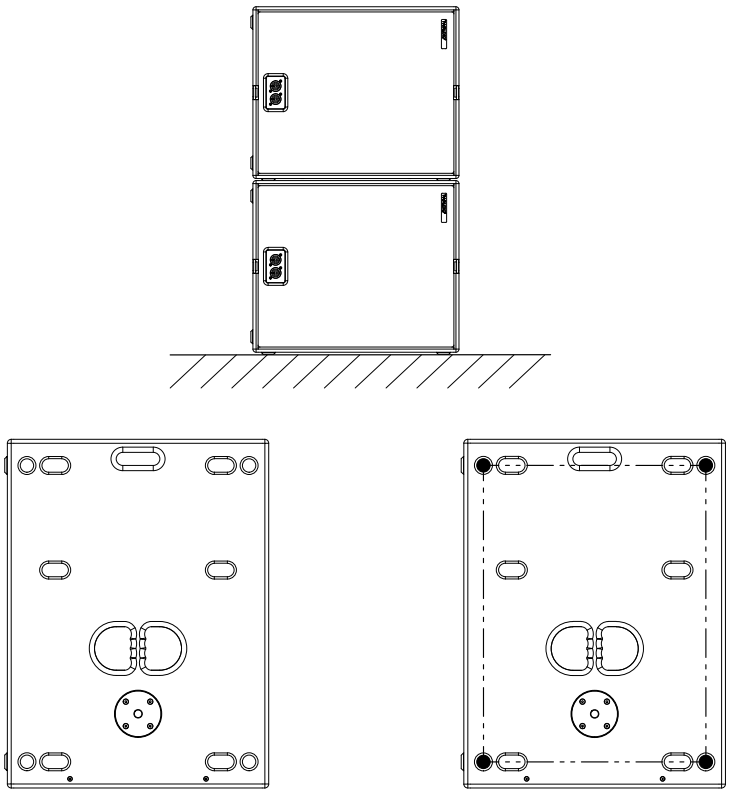

Figure 4.6.1 - B18 laid on B18 loudspeaker

4.6.2 B30 loudspeaker on B18 loudspeaker

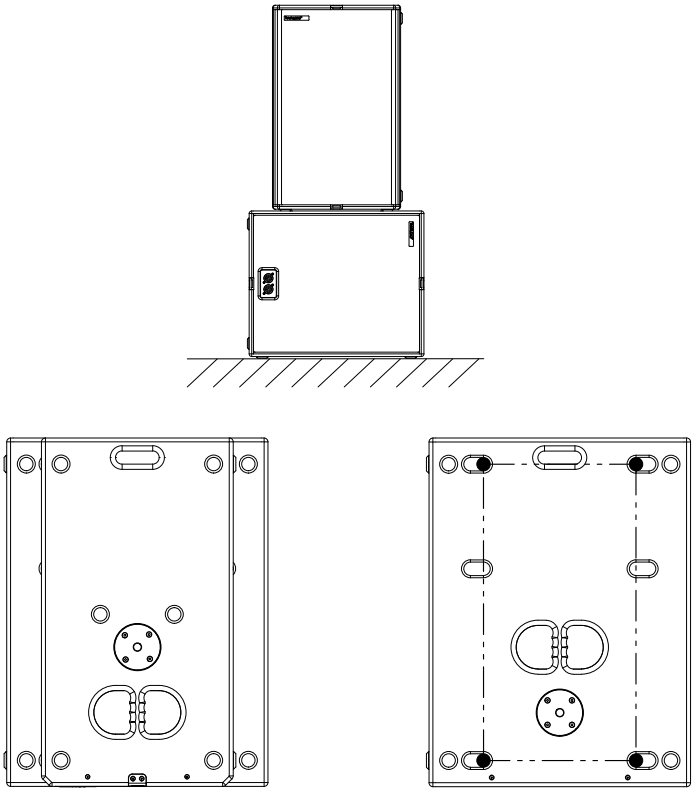

Figure 4.6.2 - B30 on B18 loudspeaker

4.6.3 B15 loudspeaker on B30 loudspeaker

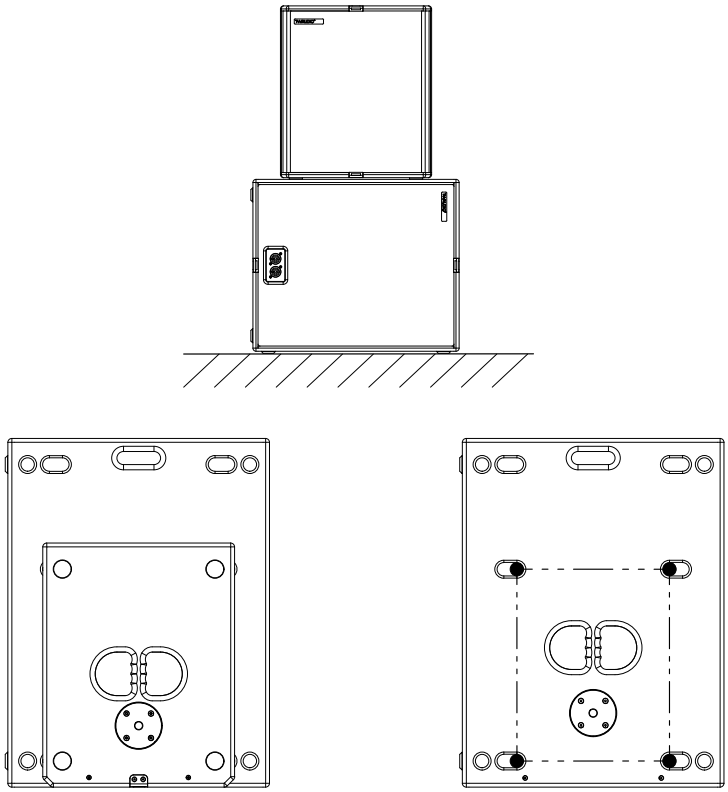

Figure 4.6.3 - B15 on B30 loudspeaker

4.6.4 VERA S32 loudspeaker on B18 loudspeaker

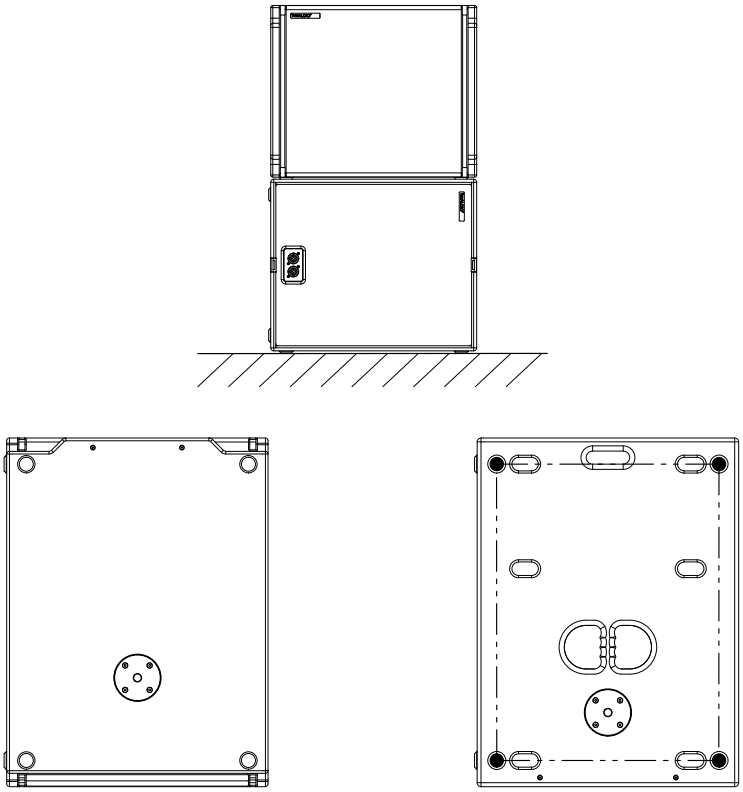

Figure 4.6.4 - VERA S32 on B18 loudspeaker

5. Transport and Storage

Due to the B18 loudspeaker weighing over 40 kg [88 lbs.], three persons are required to handle and transport the unit.

NOTE

To transport the unit with a single person, TW AUDiO recommends using the FDB18 front dolly. Alternatively, up to four B18 loudspeakers can also be transported in a QDB18 quad dolly.

When transporting and storing the unit, it is important to ensure that the surface and front grill of the loudspeaker are not damaged. Moisture can penetrate through exposed wood surfaces and cause the wood to swell. A bent or broken front grill will no longer adequately protect the sensitive speaker membranes.

In addition, appreciable dust deposits may considerably impair the functionality of a loudspeaker membrane. For this reason, the loudspeakers should be transported and stored in a safe, careful, dry and largely dust-free manner.

The following accessory parts for transport and storage are available from TW AUDiO:

- FDB18 (front dolly)
- QDB18 (quad dolly)
- CoverB18 (protective cover)

The original packaging is unsuitable as permanent storage and transport packaging.

6. CE Conformity Declaration

Copy and translation of the original CE Conformity Declaration:

We hereby declare that the below-referenced components by virtue of their design and construction, and in the configuration placed on the market by us, satisfy the safety and health requirements of the applicable EC directives. This declaration becomes invalid in case of modifications that have not been approved by us.

This declaration applies to the following components

- B18

as well as all model variants based on these, provided that they correspond to the original factory models and have not been technically modified in any way.

Applicable directives:

- 2001/95/EG
- 2011/65/EU

Applicable national standards and technical specifications:

- DIN EN 18800
- DIN EN ISO 12100
- DGUV Vorschrift 17 und 18
- EN 50581: 2013-02

Ludwigsburg, Germany, January 1st, 2021

Bernhard Wüstner

7. Disposal

It is prohibited to dispose of used electrical equipment with household refuse.

All TWAUDiO INTERNATIONAL GmbH products are so-called B2B-products. This means that they are sold by a commercial business to a commercial business. TWAUDiO products that bear the trash can symbol shown here may only be disposed of by TWAUDiO.

The loudspeaker owner is legally responsible for proper disposal of used devices that do not bear this symbol. This pertains to all products delivered prior to March 29, 2010. Nevertheless, TWAUDiO will also be happy to assist you in this case.

If you have any question regarding the disposal of used devices, please contact us under the following telephone number:

+49 (0) 71 41 - 48 89 89 0

Thus, TWAUDiO is in strict compliance with the Waste Electrical and Electronic Equipment Directive (2012/19/EU) for the protection of our environment.

TWAUDiO INTERNATIONAL is registered under the following WEEE-reg.-no. with the German National Register EAR as a B2B-manufacturer and distributor of electrical devices:

DE93295191

In countries outside of the European Union, comply with local regulations.

TW AUDiO INTERNATIONAL GmbH
Osterholzallee 140-2
71636 Ludwigsburg
Germany

Phone: + 49 (0) 71 41-48 89 89 0
Fax: + 49 (0) 71 41-48 89 89 99
E-Mail: info@twaudio.de
WWW: www.twaudio.de