TWAUDIO®

B12i

Operation manual

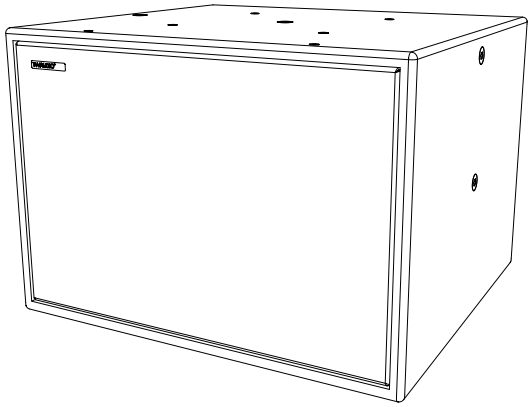

Introduction

Thank you for choosing a high-quality product “MADE IN GERMANY” from the brand TWAUDiO.

As the installation version of the B12, the B12i is the ideal choice for the ELLA-system in a wide range of applications. It also pairs perfectly with other top units, such as the M8i and M10i, and enhances the setup with a powerful subwoofer.

Housed in its highly compact enclosure is a newly designed chassis that combines extreme performance with remarkably lightweight construction. The B12i weighs just 18.5 kg, yet acoustically, it is anything but lightweight. As a direct radiator with a bass-reflex design and airflow-optimized symmetrical ports, it delivers dynamic and precise bass response – ideal for demanding and versatile applications.

For flown applications, two brackets are available: one for mounting a single B12i and another for two B12i units in a vertical arrangement. The symmetrical design of the enclosure ensures that the speakers and ports are perfectly aligned, providing uniform and consistent sound dispersion.

If you lend your product to another party, inform that party of the safety-related operating procedures and hand over this assembly guide. If you require additional copies of this manual, you can obtain them free of charge from TWAUDiO or download them from www.twaudio.de

Instructions in this user manual

Strictly adhere to the instructions contained in this operating manual that are marked as follows:

This symbol in combination with the signal word “Warning” identifies a potentially hazardous situation. Failure to comply with this safety instruction can lead to serious injury or even death.

This symbol in combination with the signal word “Warning” identifies a potentially hazardous situation for persons with a pacemaker. Failure to comply with this safety instruction can lead to serious injury or even death.

This symbol in combination with the signal word “Caution” identifies a potentially hazardous situation. Failure to comply with this safety instruction can lead to light or moderate injury.

This symbol in combination with the signal word “Note” identifies a potentially hazardous situation. Failure to comply with this safety instruction can lead to product damage.

TIP

This symbol in combination with the signal word “Tip” identifies additional information or notes that will simplify working with TW AUDiO products on the basis of practical experience.

Notes on the products

Read manual before use!

Before using the device, carefully read the operating manual and keep it with the B12i loudspeaker.

General information

Operation manual: OM-B12i
Version 1.0 en, 10/2025
© by TW AUDiO INTERNATIONAL GmbH 2025; all rights reserved.

All information contained in this operating manual was correct to the best of our knowledge at the time of printing.

Quality warranties or assurance of suitability for a certain type of use based on the technical specifications, dimensions and weights are not granted by TW AUDiO.

TW AUDiO also shall not assume liability for any secondary damage (property damage and/or personal injury) nor for the failure to comply with this operating manual!

TW AUDiO reserves the right to update this document based on recent developments.

TW AUDiO INTERNATIONAL GmbH
Osterholzallee 140-2
71636 Ludwigsburg
Germany

Phone : + 49 (0) 71 41-48 89 89 0
Fax: + 49 (0) 71 41-48 89 89 99
E-Mail: info@twaudio.de
WWW: www.twaudio.de

Content

1. Safety | Intended use 5
2. Overview 7
2.1 Components 7
3. Technical specifications 8
3.1 Data sheet 8
3.2 Connection diagram 8
4. Commissioning 9
4.1 Setup 9
4.2 M6 and M10 threaded inserts 9
4.3 Connection options 10
4.4 Operation 10
4.5 Connecting the cable 11
5. Transport and Storage 12
6. CE Conformity Declaration 12
7. Disposal 13

1. Safety | Intended use

Please adhere to the following safety instructions to avoid risks when operating loudspeakers.

The B12i loudspeaker was developed for use in professional sound systems. The loudspeaker may only be used by trained and qualified personnel.

Note the operating modes described in this operating manual. Other uses are not permissible.

Damage caused by improper use is not covered by TW AUDiO.

WARNING

Loudspeakers generate an electromagnetic field. Persons with pacemakers are not permitted to remain in the immediate vicinity of loudspeakers as the electromagnetic fields can cause pacemakers to malfunction.

WARNING

When working with heavy loads exceeding 20 kg (44 lbs.), use suitable aids (dollies, hoisting slings, etc.). Multiple persons may be required depending on the situation.

Ensure that the units are in a stable position and are firmly attached. A falling loudspeaker can result in serious personal injury and property damage.

When using and assembling TW AUDiO loudspeakers, only use materials specified by TW AUDiO. These tasks must be performed by qualified personnel. Adhere to the applicable safety regulations.

NOTE

When setting up loudspeakers, ensure that they are not exposed to the following ambient conditions:

- Direct sunlight
- Humidity
- Jolting
- Dust

WARNING

Keep away from the immediate vicinity of loudspeakers that are operated at high sound pressure levels. These loudspeaker systems are capable of endangering your health. Sound levels beginning as low as approximately 90 dB SPL can lead to long-term hearing impairment.

NOTE

Avoid:

- Feedback
- Distorted signals (clipping) and
- Peaks resulting from switching on devices, plugging in devices or unplugging devices during operation.

Such signals can lead to loudspeaker overload and ultimately to loudspeaker failure.

WARNING

Ensure that the loudspeaker is not exposed to permanent thermal overloads. Thermal overloads may cause a fire and result in serious personal injury and property damage.

Note that TW AUDiO does not provide a warranty for damage that can be attributed to this type of overload and therefore cannot be held liable for any secondary damage.

NOTE

A permanent magnetic field is present in the immediate vicinity of loudspeakers. Ensure that objects which react sensitively to magnetic fields are not located in the immediate vicinity of the loudspeaker. In particular, this applies to magnetic storage media, magnetic stripe cards such as debit cards and CRT displays. A distance of approximately one meter is sufficient to avoid damage.

NOTE

Check loudspeakers and accessory parts regularly for visible wear. This is essential to ensure continuing fault-free operation. Worn parts should be replaced immediately. Spare parts are available from TW AUDiO.

2. Overview

2.1 Components

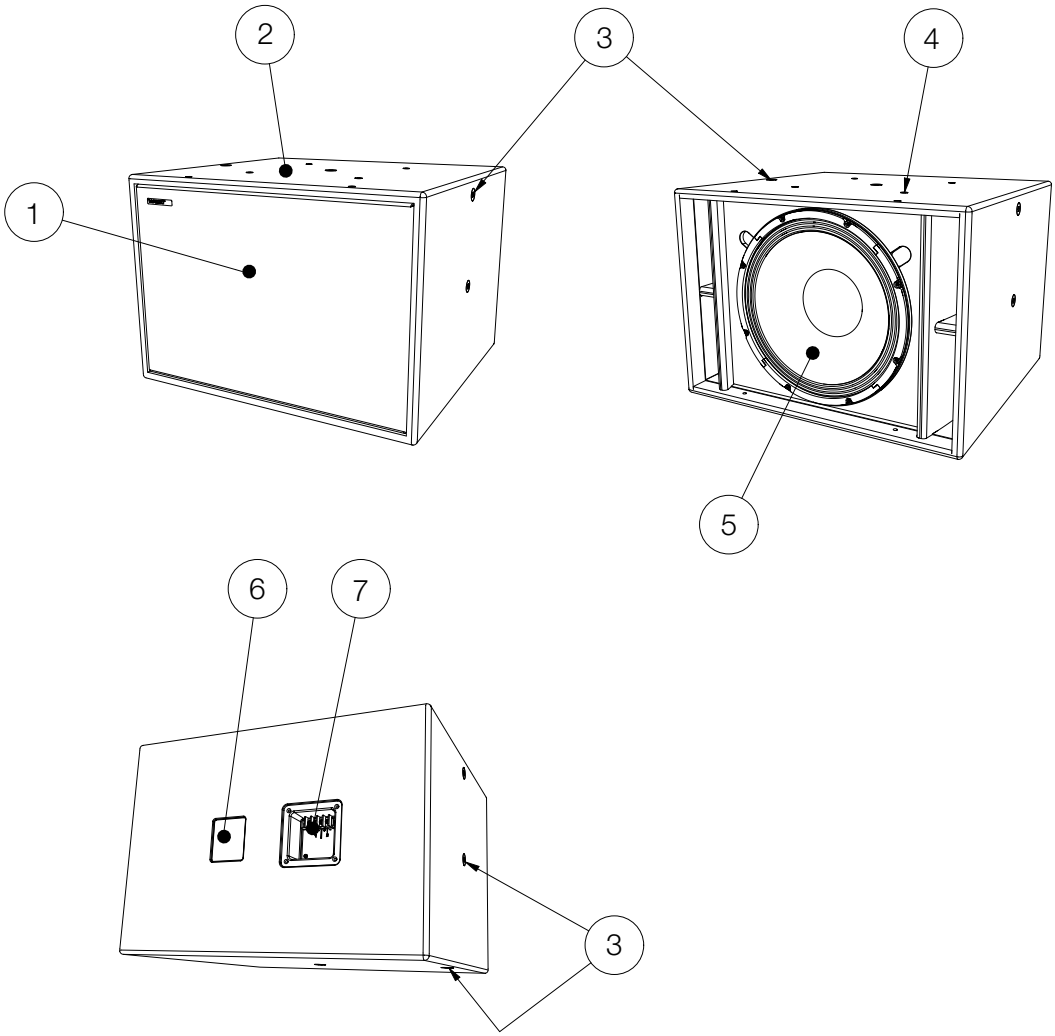

Figure 2.1 - Overview

1. Front grill
2. 15 mm Multiplex enclosure - Warnex textured paint surface
3. M10 threaded insert for attaching accessories (8 pieces)
4. M6 threaded insert for attaching accessories (4 pieces)
5. 12“ cone driver
6. Type label
7. Standard i-series screw terminal

3. Technical specifications

3.1 Data sheet

Drivers	1x 12“ LF
Frequency response	41 - 114 Hz
Power handling (program/Peak)	1500 / 3000 W
Impedance	12 Ω
Max. SPL / 1m	123 dB
Dimensions (h x w x d)	350 x 500 x 450 mm [13.78 x 19.69 x 17.72 in]
Weight	19,2 kg [42,22 lbs]
Surface	Warnex textured paint

3.2 Connection diagram

IN / LINK +	white
IN / LINK -	blue

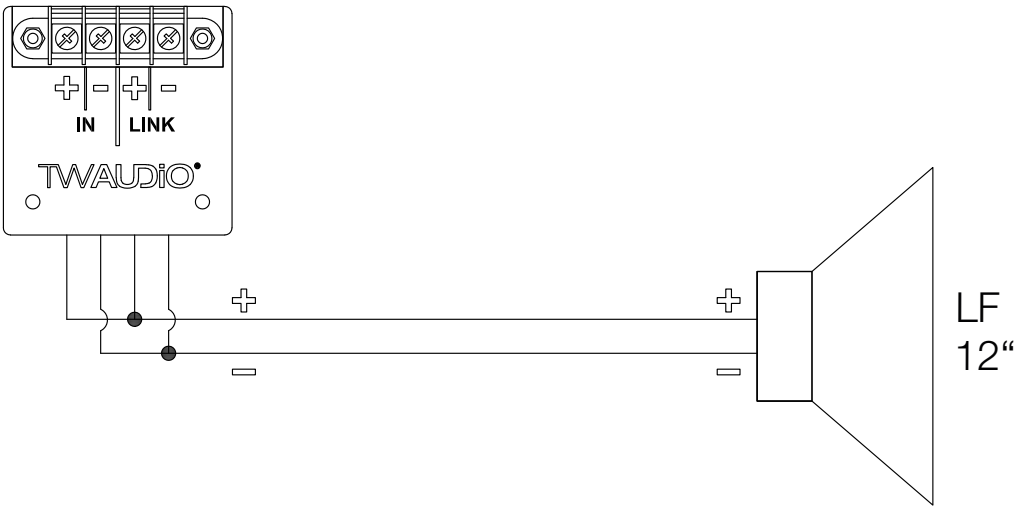

Figure 3.2 - Connection diagram

4. Commissioning

4.1 Setup

The B12i loudspeaker is designed for hanging, vertical and horizontal operation. TWAUDiO provides a wide range of accessories to securely attach the loudspeaker.

WARNING

Make sure that all system structures are located on a firm, level surface and that the surface can bear the total weight!

WARNING

Make sure the speakers are securely fastened to prevent personal injury and property damage.

NOTE

TWAUDiO recommends using only the accessories specified by TWAUDiO for securing and mounting loudspeakers.

4.2 M6 and M10 threaded inserts

Before fitting the accessories follow the subsequent steps:

1. To remove the countersunk screws remove the texture paint by using a cutter knife. Avoid damaging the surrounding paint to prevent chipping.

2. Remove for your application required countersunk screws. Use a hexalobular key with the size of TX30 or TX50.

NOTE

3. Please note that once the countersunk screws are removed, water and moisture may enter into the enclosure.

WARNING

4. For the B12i loudspeaker M6 and M10 threaded inserts, various TWAUDiO accessories can be mounted. For each product refer to the instructions.

5. Note that the load capacity is limited to a single speaker.

4.3 Connection options

The B12i loudspeaker is equipped as standard with the i-series screw terminal.

NOTE

As options there can be mounted a panel with cable gland (CG-option) or a panel with two built-in speakON® jacks (SO-option).

Furthermore, a blind cover option is available.

All connection options are only available in black colour.

NOTE

More information about the different connection options can be found in the respective operating instructions in the download area on the homepage of TW AUDiO.

4.4 Operation

Operation of the B12i loudspeaker requires a DSP-Controller. For this purpose, only presets developed by TW AUDiO are recommended. The TW AUDiO system racks are ideally suited for this purpose.

NOTE

Before connecting the loudspeaker to the amplifier, ensure that the right preset has been loaded.

Using a wrong, out dated or a preset not provided by TW AUDiO can lead to destruction of the speaker.

NOTE

Make sure that the amplifier's specifications meet the requirements. Using an amplifier that doesn't meet the specifications can destroy the loudspeaker.

Please note the technical data in section 3.1 on page 8.

4.5 Connecting the cable

To create a cable connection with an amplifier rack from TW AUDiO, proceed as follows.

NOTE

Ensure that the cable cross sectional area is sufficient (at least 1.5 mm^2) to avoid power losses. TW AUDiO recommends using the loudspeaker cables available from TW AUDiO.

When connecting the cables to the loudspeaker, ensure that polarity (+/-) and pin assignment (1/2) are correct. Incorrect connection can lead to a significant change in the loudspeaker's sound characteristics and may damage the driver.

The pin connections of the B12i loudspeaker can be found in section 3.2 ("Connection diagram") on page 8.

The internal wiring of the B12i loudspeaker allows for parallel connection of multiple loudspeaker units.

Please note that parallel connections will decrease the total impedance of your loudspeaker configuration.

The total impedance and the resulting power of the speaker configuration must match the output power of the amplifier.

5. Transport and Storage

NOTE

Ensure that the front grill of the loudspeaker is not damaged during transport and storage. Moisture can penetrate exposed wood surfaces and cause the wood to swell. A bent or broken front grill will no longer adequately protect the sensitive driver membranes.

In addition, larger dust deposits can significantly affect the functionality of a speaker membrane. This is why the product should be transported and stored in a safe, careful, dry and largely dust-free manner.

6. CE Conformity Declaration

Copy and translation of the original CE Conformity Declaration:

We hereby declare that the below-referenced components by virtue of their design and construction, and in the configuration placed on the market by us, satisfy the safety and health requirements of the applicable EC directives. This declaration becomes invalid in case of modifications that have not been approved by us.

This declaration applies to the following components

- B12i

as well as all model variants based on these, provided that they correspond to the original factory models and have not been technically modified in any way.

Applicable directives:

- 2001/95/EG
- 2011/65/EU

Applicable national standards and technical specifications:

- DIN EN 18800
- DIN EN ISO 12100
- DGUV Vorschrift 17 und 18
- EN 50581: 2013-02

Ludwigsburg, Germany, January 1st, 2021

Bernhard Wüstner

7. Disposal

It is prohibited to dispose of used electrical equipment with household refuse.

All TW AUDiO INTERNATIONAL GmbH products are so-called B2B-products. This means that they are sold by a commercial business to a commercial business. TW AUDiO products that bear the trash can symbol shown here may only be disposed of by TW AUDiO.

The loudspeaker owner is legally responsible for proper disposal of used devices that do not bear this symbol. This pertains to all products delivered prior to March 29, 2010. Nevertheless, TW AUDiO will also be happy to assist you in this case.

If you have any question regarding the disposal of used devices, please contact us under the following telephone number:

+49 (0) 71 41 - 48 89 89 0

Thus, TW AUDiO is in strict compliance with the Waste Electrical and Electronic Equipment Directive (2012/19/EU) for the protection of our environment.

TW AUDiO INTERNATIONAL is registered under the following WEEE-reg.-no. with the German National Register EAR as a B2B-manufacturer and distributor of electrical devices:

DE93295191

In countries outside of the European Union, comply with local regulations.

TW AUDiO INTERNATIONAL GmbH
Osterholzallee 140-2
71636 Ludwigsburg
Germany

Phone: + 49 (0) 71 41-48 89 89 0
Fax: + 49 (0) 71 41-48 89 89 99
E-Mail: info@twaudio.de
WWW: www.twaudio.de