TWAUDIO®

B12

Operation manual

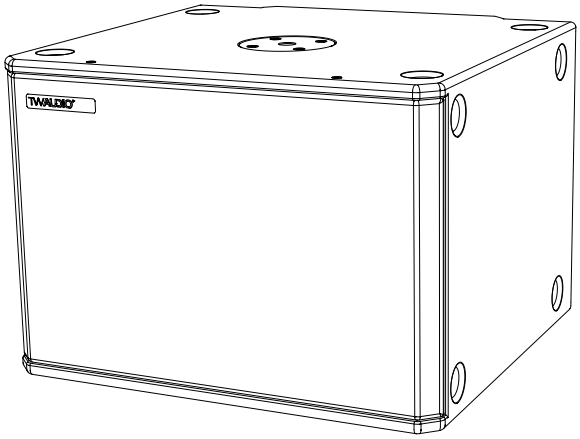

Introduction

Thank you for choosing a high-quality product “MADE IN GERMANY” from the brand TWAUDiO.

The TWAUDiO B12 is a completely new development, optimized in every aspect—from the chassis to the enclosure. It serves as a powerful addition to our ELLA6-system and pairs seamlessly with M8 and M10, providing exceptional flexibility for various applications.

The ultra-compact enclosure is equipped with a newly engineered chassis, delivering impressive performance while keeping the weight down to just 19 kg. However, its acoustic capabilities are anything but lightweight.

With its direct radiating bass-reflex design and optimized symmetrical ports, the loudspeaker produces a precise and dynamic bass response, making it ideal for versatile and challenging applications.

Two B12 can be mechanically connected back-to-back with an included magnet system to create an acoustic dual-12“-subwoofer-unit. Simply deploy, connect, load the cardioid preset, and you‘re ready to go – no additional measurements required. This saves time and allows for quick and flexible adaptation to spatial conditions or artist requirements.

Its design establishes it as a „multi-functional subwoofer,“ making it a one-of-a-kind product on the market.

If you lend your product to another party, inform that party of the safety-related operating procedures and hand over this assembly guide. If you require additional copies of this manual, you can obtain them free of charge from TWAUDiO or download them from www.twaudio.de

Instructions in this user manual

Strictly adhere to the instructions contained in this operating manual that are marked as follows:

This symbol in combination with the signal word “Warning” identifies a potentially hazardous situation. Failure to comply with this safety instruction can lead to serious injury or even death.

This symbol in combination with the signal word “Warning” identifies a potentially hazardous situation for persons with a pacemaker. Failure to comply with this safety instruction can lead to serious injury or even death.

This symbol in combination with the signal word “Caution” identifies a potentially hazardous situation. Failure to comply with this safety instruction can lead to light or moderate injury.

NOTE

This symbol in combination with the signal word “Note” identifies a potentially hazardous situation. Failure to comply with this safety instruction can lead to product damage.

TIP

This symbol in combination with the signal word “Tip” identifies additional information or notes that will simplify working with TW AUDiO products on the basis of practical experience.

Notes on the products

Read manual before use!

Before using the device, carefully read the operating manual and keep it with the B12 loudspeaker.

General information

Operation manual: OM-B12
Version 1.0 en, 11/2025
© by TW AUDiO INTERNATIONAL GmbH 2025; all rights reserved.

All information contained in this operating manual was correct to the best of our knowledge at the time of printing.

Quality warranties or assurance of suitability for a certain type of use based on the technical specifications, dimensions and weights are not granted by TW AUDiO.

TW AUDiO also shall not assume liability for any secondary damage (property damage and/or personal injury) nor for the failure to comply with this operating manual!

TW AUDiO reserves the right to update this document based on recent developments.

TW AUDiO INTERNATIONAL GmbH
Osterholzallee 140-2
71636 Ludwigsburg

Phone : + 49 (0) 71 41-48 89 89 0
Fax: + 49 (0) 71 41-48 89 89 99
E-Mail: info@twaudio.de
WWW: www.twaudio.de

Content

1. Safety | Intended use 5
2. Overview 7
2.1 Components 7
3. Technical specifications 8
3.1 Data sheet 8
3.2 Connection diagram 8
4. Commissioning 9
4.1 Setup 9
4.2 M20 pole mount flange 9
4.3 Operation 12
4.4 Connecting the cable 12
4.5 Magnetic system 13
4.5.1 Horiontal 13
4.5.2 Vertical 13
4.5.3 Further installation options 14
5. Transport and Storage 15
6. CE Conformity Declaration 16
7. Disposal 17

1. Safety | Intended use

Please adhere to the following safety instructions to avoid risks when operating loudspeakers.

The B12 loudspeaker is developed for use in professional sound systems. The loudspeaker may only be used by trained and qualified personnel.

Note the operating modes described in this operating manual. Other uses are not permissible.

Damage caused by improper use is not covered by TW AUDiO.

WARNING

Loudspeakers generate an electromagnetic field. Persons with pacemakers are not permitted to remain in the immediate vicinity of loudspeakers as the electromagnetic fields can cause pacemakers to malfunction.

WARNING

When working with heavy loads exceeding 20 kg (44 lbs.), use suitable aids (dollies, hoisting slings, etc.). Multiple persons may be required depending on the situation.

Ensure that the units are in a stable position and are firmly attached. A falling loudspeaker can result in serious personal injury and property damage.

When using and assembling TW AUDiO loudspeakers, only use materials specified by TW AUDiO. These tasks must be performed by qualified personnel. Adhere to the applicable safety regulations.

NOTE

When setting up loudspeakers, ensure that they are not exposed to the following ambient conditions:

- Direct sunlight
- Humidity
- Jolting
- Dust

WARNING

Keep away from the immediate vicinity of loudspeakers that are operated at high sound pressure levels. These loudspeaker systems are capable of endangering your health. Sound levels beginning as low as approximately 90 dB SPL can lead to long-term hearing impairment.

NOTE

Avoid:

- Feedback
- Distorted signals (clipping) and
- Peaks resulting from switching on devices, plugging in devices or unplugging devices during operation.

Such signals can lead to loudspeaker overload and ultimately to loudspeaker failure.

WARNING

Ensure that the loudspeaker is not exposed to permanent thermal overloads. Thermal overloads may cause a fire and result in serious personal injury and property damage.

Note that TW AUDiO does not provide a warranty for damage that can be attributed to this type of overload and therefore cannot be held liable for any secondary damage.

NOTE

A permanent magnetic field is present in the immediate vicinity of loudspeakers. Ensure that objects which react sensitively to magnetic fields are not located in the immediate vicinity of the loudspeaker. In particular, this applies to magnetic storage media, magnetic stripe cards such as debit cards and CRT displays. A distance of approximately one meter is sufficient to avoid damage.

NOTE

Check loudspeakers and accessory parts regularly for visible wear. This is essential to ensure continuing fault-free operation. Worn parts should be replaced immediately. Spare parts are available from TW AUDiO.

2. Overview

2.1 Components

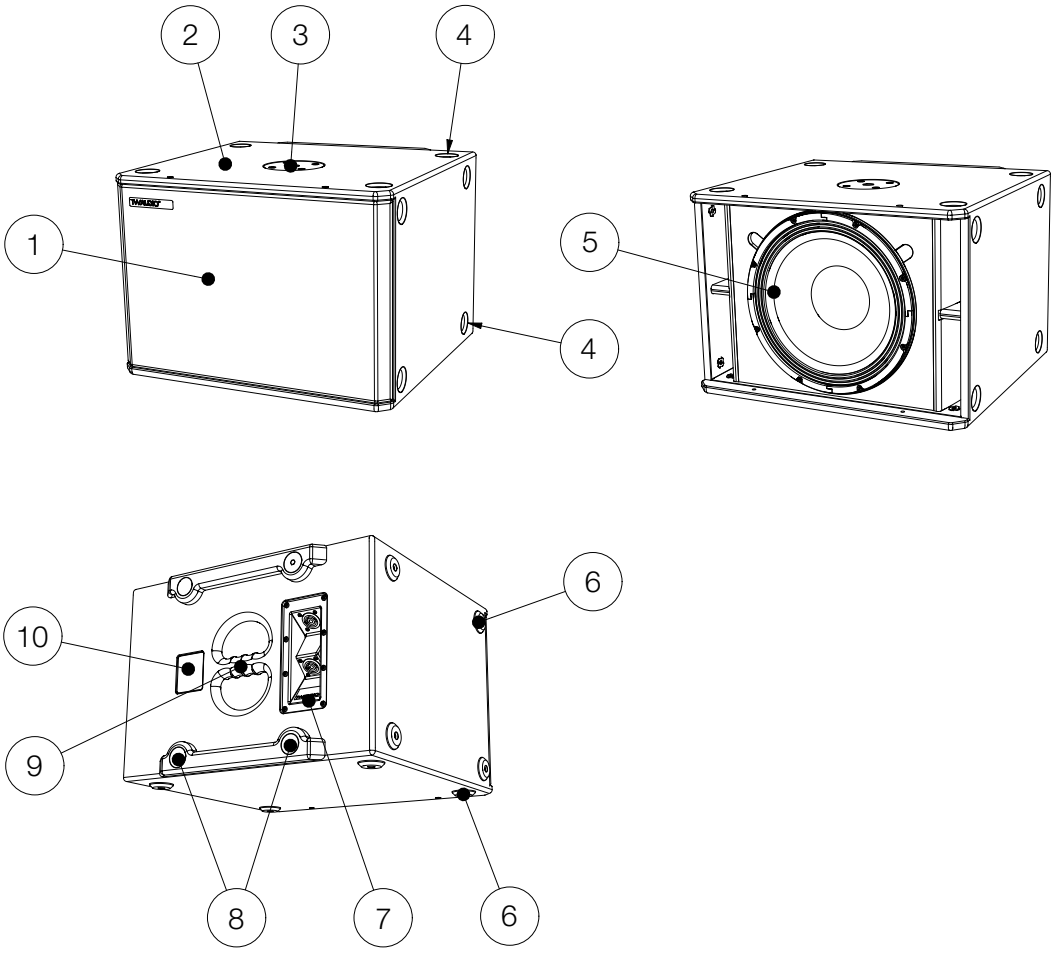

Figure 2.1 - Overview

1. Front grill
2. 18 mm multiplex housing – Polyurea surface finish
3. M20 pole mount flange for attaching a distance rod
4. Milling for rubberfeet for safely stacking loudspeakers
5. 12“ cone driver
6. Rubber feet (8 pieces)
7. Connection panel with one SpeakON® socket each, top and bottom
8. Magnet system, top and bottom
9. Ergonomic carrying handle (rear)
10. Type label

3. Technical specifications

3.1 Data sheet

Drivers	1x 12“ LF
Frequency response	41 - 114 Hz
Power handling (program/Peak)	1500 / 3000 W
Impedance	12 Ω
Max. SPL / 1 m	123 dB
Dimensions (h x w x d)	356 x 506 x 468 mm [14.02 x 19.92 x 18.43 in]
Weight	20.1 kg [44.2 lbs]
Surface	Polyurea-coated

3.2 Connection diagram

PIN 1+	red
PIN 1-	black
PIN 2+	white
PIN 2-	blue

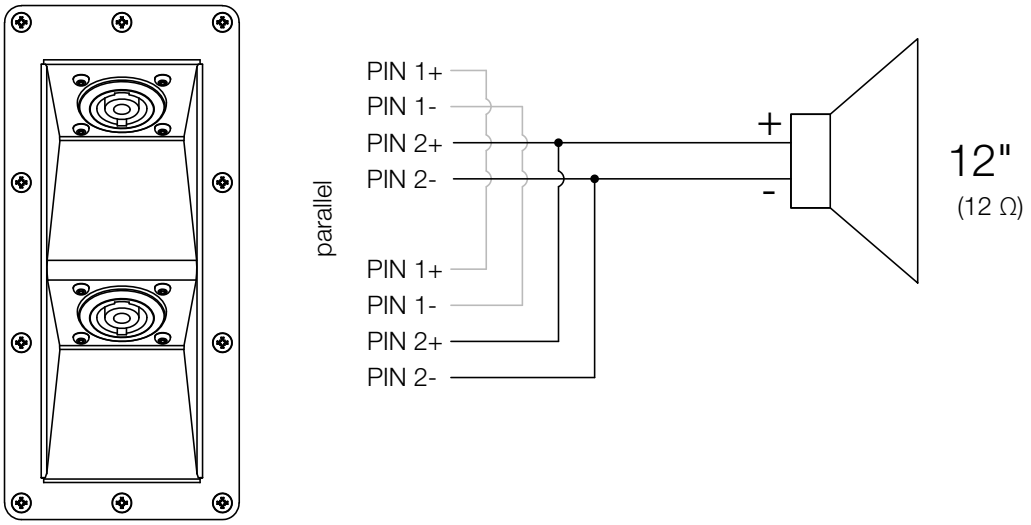

Figure 3.2 - Connection diagram

4. Commissioning

4.1 Setup

The B12 loudspeaker are designed for standing, vertikal and horizontal operation.

WARNING

Make sure that all system structures are located on a firm, level surface and that the surface can bear the total weight!

WARNING

Make sure the speakers are securely fastened to prevent personal injury and property damage. Secure stacked loudspeakers properly so that they can be tipped by 10° in any direction without toppling.

NOTE

TW AUDiO recommends using only the accessories specified by TW AUDiO for securing and mounting loudspeakers.

4.2 M20 pole mount flange

For all system components mounted on top of the M20 pole mount flange, observe the respective operating instructions!

Also be sure to observe all of the following warnings:

WARNING

Make sure that the maximum load of 50 kg / 110 lbs for the M20 pole mount flange is not exceeded! Figure 2.1 – Item 2.

WARNING

Make sure that no unauthorized persons can access the system structures!

Cordon off the area professionally!

WARNING

The M20 pole mount flange (figure 2.1- item 2) is not designed for side forces once mounted – do not apply any pressure from the sides.

Make sure that no external forces are applied to the system structures. No objects or persons should lean against the structures, no objects should be thrown against them. If pressure is applied on the flange the loudspeaker may be damaged or falling over.

WARNING

Before setting up the system outdoors, consider unexpected wind conditions at the operation site!

Disassemble your system immediately when wind speeds exceed 8 bft (34 to 40 kn / 62 to 74 kph / 38.5 to 46 mph) and secure the system components!

Make sure that there are no persons in the immediate vicinity of the system structure!

WARNING

Make sure that the system structures are not operated over the audience at wind speeds in excess of 6 bft (22 to 27 kn / 39 to 49 kph / 24.2 to 30.45 mph) and that there are no persons in the immediate vicinity of the system structure!

WARNING

Please note that only centered loads are allowed to be placed on the M20 pole mount flange – Figure 2.1 – Item 2.

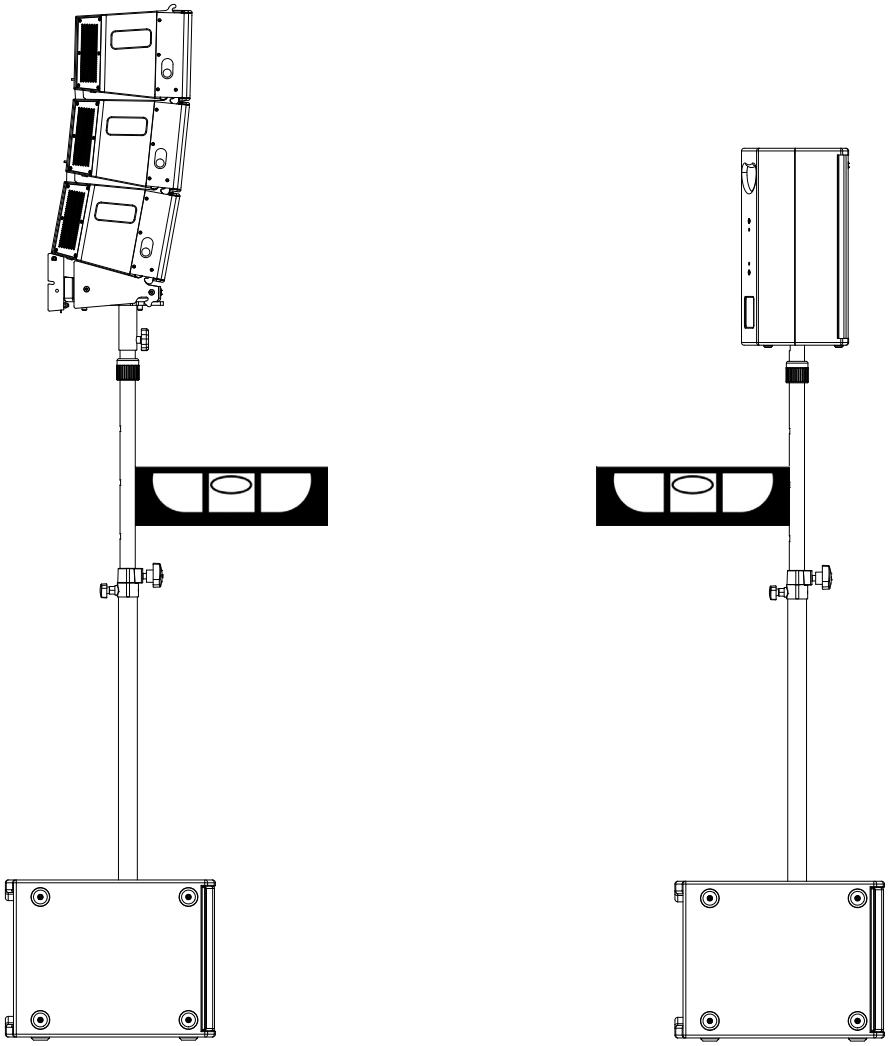

Figure 4.2.1 - system setup B12

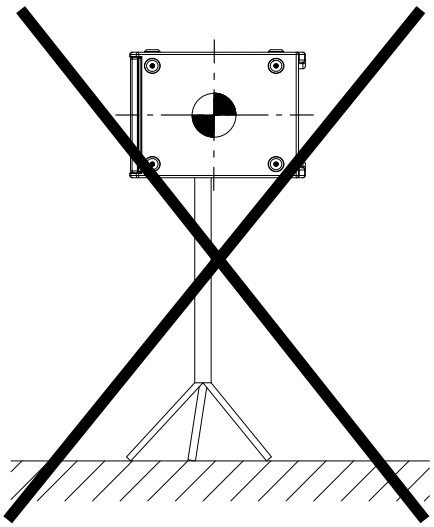

Figure 4.2.2 - B12 – improper installation

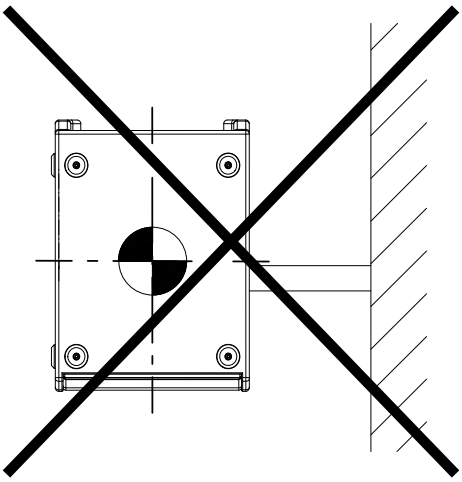

Figure 4.2.3 - B12 – improper wall mounting

4.3 Operation

Operation of the B12 loudspeaker requires a DSP-Controller. For this purpose, only presets developed by TW AUDiO are recommended. The TW AUDiO system racks are ideally suited for this purpose.

NOTE

Before connecting the loudspeaker to the amplifier, ensure that the right preset has been loaded.

Using a wrong, out dated or a preset not provided by TW AUDiO can lead to destruction of the speaker.

NOTE

Make sure that the amplifier's specifications meet the requirements. Using an amplifier that doesn't meet the specifications can destroy the loudspeaker.

Please note the technical data in section 3.1 on page 8.

In Cardioid mode, the focus is on maximum sound pressure reduction behind the loudspeaker setup, with partial forward-facing level addition.

The rear speaker produces an inverted signal to cancel out sound components on the back. Depending on the distance between the loudspeakers and their transit time difference, there will be a frequency-dependent sound pressure level addition in front of the loudspeaker arrangement. By adjusting the transit time difference between the two individual drivers, a different dispersion pattern can be achieved.

4.4 Connecting the cable

To create a cable connection with an amplifier rack from TW AUDiO, proceed as follows.

NOTE

Ensure that the cable cross sectional area is sufficient (at least 1.5 mm^2) to avoid power losses. TW AUDiO recommends using the loudspeaker cables available from TW AUDiO.

When connecting the cables to the loudspeaker, ensure that polarity (+/-) and pin assignment (1/2) are correct. Incorrect connection can lead to a significant change in the loudspeaker's sound characteristics and may damage the driver.

The pin connections of the B12 loudspeaker can be found in section 3.2 ("Connection diagram") on page 8.

The internal wiring of the B12 loudspeaker allows for parallel connection of multiple loudspeaker units.

Please note that parallel connections will decrease the total impedance of your loudspeaker configuration.

The total impedance and the resulting power of the speaker configuration must match the output power of the amplifier.

NOTE

In Cardio Setup mode, the sound radiated toward the rear is reduced. Ensure that you have selected the correct preset for this setup. Incorrect connection results in a significant change in the loudspeaker sound characteristics and may cause damage.

4.5 Magnetic system

To set up the cardioid operating mode of the B12 loudspeaker, two B12 loudspeakers can be mechanically connected back to back with a magnetic system built into the enclosure (see figure 2.1 - Pos.8). The two B12 loudspeakers can be placed horizontally or vertically.

4.5.1 Horiontal

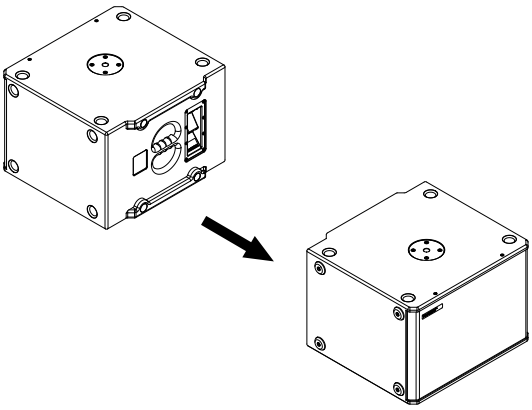

Figure 4.5.1.1 - B12 loudspeaker before assembling

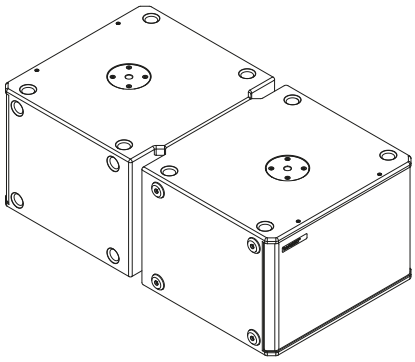

Figure 4.5.1.2 - B12 loudspeaker connected by the magnetic system

4.5.2 Vertical

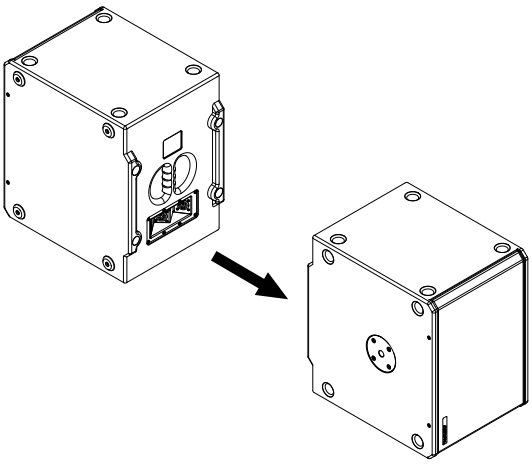

Figure 4.5.2.1 - B12 loudspeaker before assembling

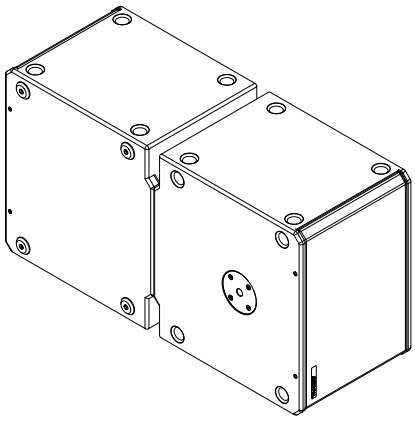

Figure 4.5.2.2 - B12 loudspeaker connected by the magnetic system

4.5.3 Further installation options

The following additional setup options can be realized with the B12 loudspeaker:

1. Four B12 loudspeaker horizontally

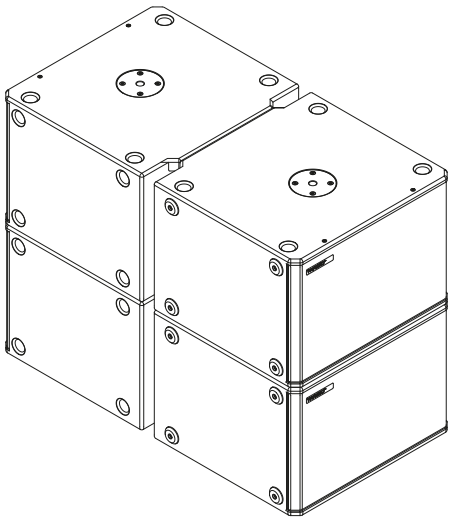

Figure 4.5.3.1 - B12 loudspeaker horizontal

2. Directional subwoofer configurations of three B12 loudspeaker

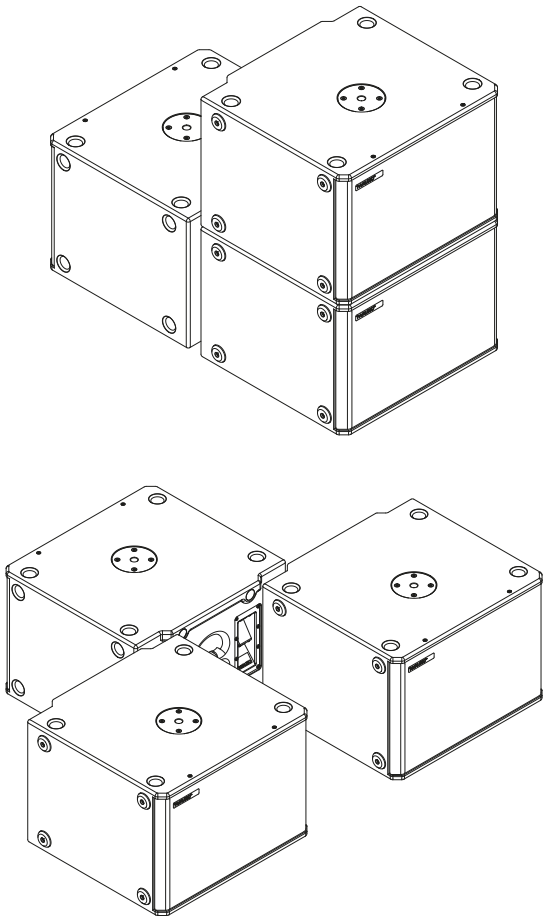

Figure 4.5.3.2 - directional B12 loudspeaker configurations

5. Transport and Storage

NOTE

To allow a single person to transport up to four B12 loudspeakers, TW AUDiO recommends using the QDB12 quad dolly.

When transporting and storing the unit, it is important to ensure that the surface and front grill of the loudspeaker are not damaged. Moisture can penetrate through exposed wood surfaces and cause the wood to swell. A bent or broken front grill will no longer adequately protect the sensitive speaker membranes.

In addition, appreciable dust deposits may considerably impair the functionality of a loudspeaker membrane. For this reason, the loudspeakers should be transported and stored in a safe, careful, dry and largely dust-free manner.

The following accessory parts for transport and storage are available from TW AUDiO:

- QDB12 (quad dolly)
- CoverB12 (protective cover)
- BagB12 (Carrying bag)

The original packaging is unsuitable as permanent storage and transport packaging.

6. CE Conformity Declaration

Copy and translation of the original CE Conformity Declaration:

We hereby declare that the below-referenced components by virtue of their design and construction, and in the configuration placed on the market by us, satisfy the safety and health requirements of the applicable EC directives. This declaration becomes invalid in case of modifications that have not been approved by us.

This declaration applies to the following components

- B12

as well as all model variants based on these, provided that they correspond to the original factory models and have not been technically modified in any way.

Applicable directives:

- 2001/95/EG
- 2011/65/EU

Applicable national standards and technical specifications:

- DIN EN 18800
- DIN EN ISO 12100
- DGUV Vorschrift 17 und 18
- EN 50581: 2013-02

Ludwigsburg, Germany, January 1st, 2021

Bernhard Wüstner

7. Disposal

It is prohibited to dispose of used electrical equipment with household refuse.

All TW AUDiO INTERNATIONAL GmbH products are so-called B2B-products. This means that they are sold by a commercial business to a commercial business. TW AUDiO products that bear the trash can symbol shown here may only be disposed of by TW AUDiO.

The loudspeaker owner is legally responsible for proper disposal of used devices that do not bear this symbol. This pertains to all products delivered prior to March 29, 2010. Nevertheless, TW AUDiO will also be happy to assist you in this case.

If you have any question regarding the disposal of used devices, please contact us under the following telephone number:

+49 (0) 71 41 - 48 89 89 0

Thus, TW AUDiO is in strict compliance with the Waste Electrical and Electronic Equipment Directive (2012/19/EU) for the protection of our environment.

TW AUDiO INTERNATIONAL is registered under the following WEEE-reg.-no. with the German National Register EAR as a B2B-manufacturer and distributor of electrical devices:

DE93295191

In countries outside of the European Union, comply with local regulations.

TW AUDiO INTERNATIONAL GmbH
Osterholzallee 140-2
71636 Ludwigsburg

Phone: + 49 (0) 71 41-48 89 89 0
Fax: + 49 (0) 71 41-48 89 89 99
E-Mail: info@twaudio.de
WWW: www.twaudio.de