DMX CHARTS

RDM Personality ID List

ID	DMX Mode	Footprint
1	STANDARD	46

RDM Model ID

0xA027

PAN/TILT POSITION RELATED TO DMX VALUES

*Home position set to CUSTOM (**Default**)*

Pan = 0
Tilt = 0

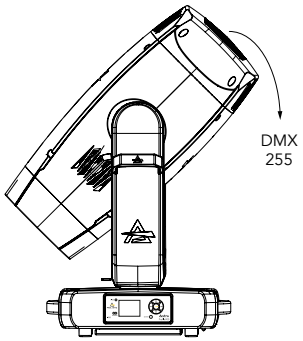

Pan = 0
Tilt = 128

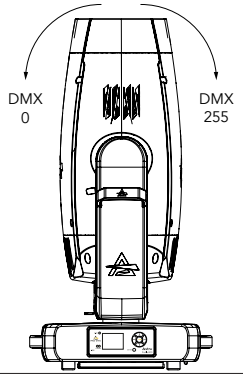

Pan = 0
Tilt = 255

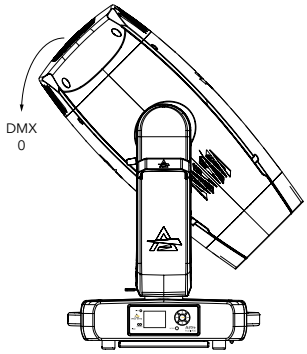

Tilt movement range: 260°
Pan movement range: 540°

Pan = 0
Tilt = 42

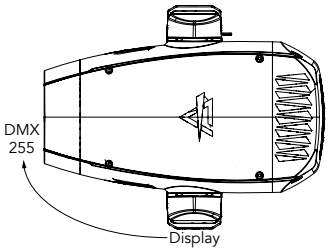

Pan = 128
Tilt = 42

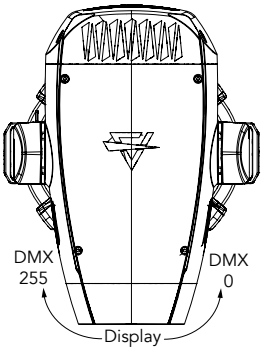

Pan = 255
Tilt = 42

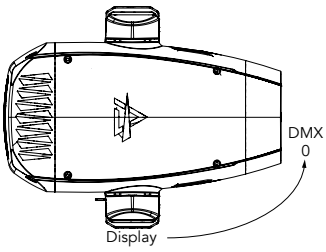

PAN/TILT POSITION RELATED TO DMX VALUES

Home position set to STANDARD (User selectable)

Pan = 128
Tilt = 0

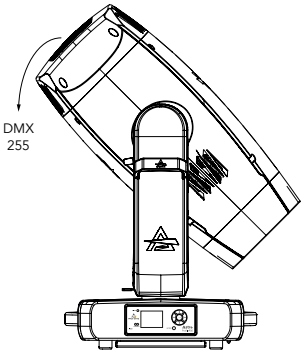

Pan = 128
Tilt = 128

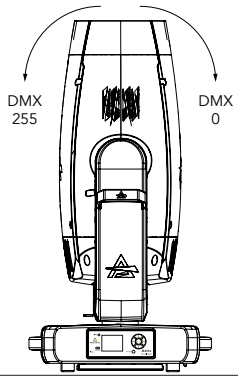

Pan = 128
Tilt = 255

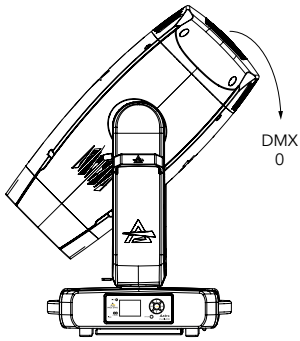

Tilt movement range: 270°
Pan movement range: 540°

Pan = 0
Tilt = 42

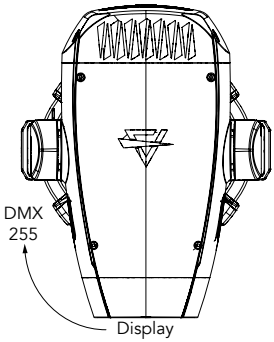

Pan = 128
Tilt = 42

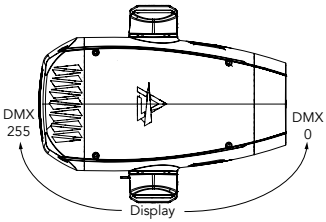

Pan = 255
Tilt = 42

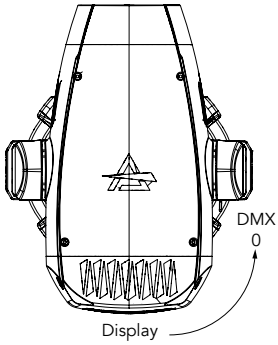

DMX Chart Summary

Channel	STANDARD
1	Pan
2	Pan fine
3	Tilt
4	Tilt fine
5	Dimmer
6	Dimmer Fine
7	Shutter
8	Cyan
9	Magenta
10	Yellow
11	CTO
12	Color Wheel
13	Color Wheel Fine Pos
14	Rot Gobo Wheel 1
15	Gobo Rot 1
16	Gobo Rot Fine 1
17	Rot Gobo Wheel 2
18	Gobo Rot 2
19	Gobo Rot Fine 2
20	Prism 1
21	Prism 1 Index/Rotation
22	Prism 2
23	Prism 2 Index/Rotation

Channel	STANDARD
24	Light Frost
25	Heavy Frost
26	Iris
27	Iris Fine
28	Zoom
29	Zoom Fine
30	Focus
31	Focus Fine
32	Animation Insertion
33	Animation Rotation
34	Blade 1 position
35	Blade 1 swivelling
36	Blade 2 position
37	Blade 2 swivelling
38	Blade 3 position
39	Blade 3 swivelling
40	Blade 4 position
41	Blade 4 swivelling
42	Frame rotation
43	Frame macros
44	Frame macros speed
45	Autofocus
46	Control

FOCUS TRACKING

This function provides auto-adjustment of the focus during the zoom movement:

1. Select the function to be tracked via channel 45 ("Focus Tracking").
2. Focus the selected function at a narrow zoom (***NOTE**: the zoom value must be less than 135*).
3. As you adjust the zoom, the focus will automatically follow, keeping the projection focused.
4. If you select a different function via channel 45 ("Focus Tracking"), the focus will automatically adjust to track the new selection.

Channel STANDARD	Name	Function	Min DMX	Max DMX	Default
1	Pan	Lineary from 0% to 100%	0	255	128
2	Pan fine	Lineary from 0% to 100%	0	255	128
3	Tilt	Lineary from 0% to 100%	0	255	128
4	Tilt fine	Lineary from 0% to 100%	0	255	128
5	Dimmer	Lineary from close to open	0	255	000
6	Dimmer Fine	Lineary from close to open	0	255	000
7	Shutter	Open	0	1	255
		Strobe from slow to fast	2	62	
		Open	63	64	
		Pulse in from slow to fast	65	125	
		Close	126	127	
		Pulse out from slow to fast	128	188	
		Open	189	190	
		Randon from slow to fast	191	251	
		Open	252	255	
8	Cyan	Linear saturation 0 – 100%	0	255	000
9	Magenta	Linear saturation 0 – 100%	0	255	000
10	Yellow	Linear saturation 0 – 100%	0	255	000
11	CTO	Linear saturation 7000K to 2700K	0	255	000
12	Color Wheel	**Color Positioning**			000
		Open	0		
		Open + Red	1	21	
		Red	22		
		Red + 5600K	23	43	
		5600K	44		
		5600K + Magenta	45	65	
		Magenta	66		
		Magenta + Green	67	87	
		Green	88		
		Green + Dark Orange	89	109	
		Dark Orange	110		
		Dark Orange + Dark Blue	111	131	
		Dark Blue	132		
		Dark Blue + Open	133	153	
		Open	154	159	
		Color Slot			
		Open	160	164	

Channel STANDARD	Name	Function	Min DMX	Max DMX	Default
12	Color Wheel	Red	165	169	000
		5600K	170	174	
		Magenta	175	179	
		Green	180	184	
		Dark Orange	185	189	
		Dark Blue	190	199	
		Color Wheel Rotation			
		Forward rainbow - Fast to slow	200	224	
		No rotation	225	230	
		Backwards rainbow - Slow to fast	231	255	
13	Color Wheel Fine Positioning	Fine positioning	0	255	0
14	Rot Gobo Wheel 1	Open	0	11	000
		Gobo Indexing (set next ch)			
		GOBO 1	12	19	
		GOBO 2	20	27	
		GOBO 3	28	35	
		GOBO 4	36	43	
		GOBO 5	44	51	
		GOBO 6	52	59	
		GOBO 7	60	67	
		Gobo Rotation (set next ch)			
		GOBO 1	68	75	
		GOBO 2	76	83	
		GOBO 3	84	91	
		GOBO 4	92	99	
		GOBO 5	100	107	
		GOBO 6	108	115	
		GOBO 7	116	123	
		Gobo shaking - Slow to fast (Index on next channel)			
		GOBO 1	124	133	
		GOBO 2	134	143	
		GOBO 3	144	153	
		GOBO 4	154	163	
		GOBO 5	164	173	
		GOBO 6	174	183	
		GOBO 7	184	193	

Channel STANDARD	Name	Function	Min DMX	Max DMX	Default
14	Rot Gobo Wheel 1	**Gobo Wheel Rotation**			000
		Forward wheel rotation - Fast to slow	194	223	
		No rotation	224	225	
		Backwards wheel rotation - Slow to fast	226	255	
15	Gobo Rot 1	**Gobo Indexing**			000
		Gobo index 0° - 360°	0	255	
		Gobo Rotation			000
		No rotation	0	0	
		Forward gobo rotation - Fast to slow	1	127	
		No rotation	128	128	
		Backwards gobo rotation - Slow to fast	129	255	
16	Gobo Rot Fine 1	Fine indexing/rotation	0	255	0
17	Rot Gobo Wheel 2	Open	0	11	000
		Gobo Indexing (set next ch)			
		GOBO 1	12	19	
		GOBO 2	20	27	
		GOBO 3	28	35	
		GOBO 4	36	43	
		GOBO 5	44	51	
		GOBO 6	52	59	
		GOBO 7	60	67	
		Gobo Rotation (set next ch)			
		GOBO 1	68	75	
		GOBO 2	76	83	
		GOBO 3	84	91	
		GOBO 4	92	99	
		GOBO 5	100	107	
		GOBO 6	108	115	
		GOBO 7	116	123	
		Gobo shaking - Slow to fast (Index on next channel)			
		GOBO 1	124	133	
		GOBO 2	134	143	
		GOBO 3	144	153	
		GOBO 4	154	163	
		GOBO 5	164	173	
		GOBO 6	174	183	
		GOBO 7	184	193	

Channel STANDARD	Name	Function	Min DMX	Max DMX	Default
17	Rot Gobo Wheel 2	**Gobo Wheel Rotation**			000
		Forward wheel rotation - Fast to slow	194	223	
		No rotation	224	225	
		Backwards wheel rotation - Slow to fast	226	255	
18	Gobo Rot 2	**Gobo Indexing**			000
		Gobo index 0° - 360°	0	255	
		Gobo Rotation			000
		No rotation	0	0	
		Forward gobo rotation - Fast to slow	1	127	
		No rotation	128	128	
		Backwards gobo rotation - Slow to fast	129	255	
19	Gobo Rot Fine 2	Fine indexing/rotation	0	255	0
20	Prism 1	Open	0	29	000
		Prism Indexing (set next ch)	30	59	
		Prism Rotation (set next ch)	60	89	
		Reserved	90	255	
21	Prism 1 Index/ Rotation	**Prism Indexing**			000
		Prism Indexing	0	255	
		Prism Rotation			
		Prism No Rotation	0	0	
		Prism forward rotation fast to slow	1	127	
		Prism No Rotation	128	128	
		Prism backwards rotation slow to fast	129	255	
22	Prism 2	Open	0	29	000
		Prism Indexing (set next ch)	30	59	
		Prism Rotation (set next ch)	60	89	
		Reserved	90	255	
23	Prism 2 Index/ Rotation	**Prism Indexing**			000
		Prism Indexing	0	255	
		Prism Rotation			
		Prism No Rotation	0	0	
		Prism forward rotation fast to slow	1	127	
		Prism No Rotation	128	128	
		Prism backwards rotation slow to fast	1	127	
24	Light Frost	Linear insertion 0 – 100%	0	255	000
25	Heavy Frost	Linear insertion 0 – 100%	0	255	000

Channel STANDARD	Name	Function	Min DMX	Max DMX	Default
26	Iris	Open	0	0	000
		Max to min diameter	1	127	
		Closed	128	129	
		Pulse close slow to fast	130	154	
		Pulse open slow to fast	155	179	
		Random pulse closing slow to fast	180	204	
		Random pulse opening slow to fast	205	229	
		Reserved	230	255	
27	Iris Fine	Iris fine movement	0	255	000
28	Zoom	Zoom from min to max beam angle	0	255	128
29	Zoom Fine	Fine zooming	0	255	000
30	Focus	Focus adjustment	0	255	128
31	Focus Fine	Fine focusing	0	255	000
32	Animation Insertion	Linear insertion from 0% to 100%	0	255	000
33	Animation Rotation	Indexing	0	127	000
		Forward rotation - Fast to slow	128	190	
		Stop	191	192	
		Backwards rotation - Slow to fast	193	255	
34	Blade 1 position	Movement from outward to inward	0	255	000
35	Blade 1 swivelling	Swivelling from -30° towards 0°	0	127	128
		0 degrees	128	128	
		Swivelling from 0° towards +30°	129	255	
36	Blade 2 position	Movement from outward to inward	0	255	000
37	Blade 2 swivelling	Swivelling from -30° towards 0°	0	127	128
		0 degrees	128	128	
		Swivelling from 0° towards +30°	129	255	
38	Blade 3 position	Movement from outward to inward	0	255	000
39	Blade 3 swivelling	Swivelling from -30° towards 0°	0	127	128
		0 degrees	128	128	
		Swivelling from 0° towards +30°	129	255	
40	Blade 4 position	Movement from outward to inward	0	255	000
41	Blade 4 swivelling	Swivelling from -30° towards 0°	0	127	128
		0 degrees	128	128	
		Swivelling from 0° towards +30°	129	255	
42	Frame rotation	-45 degrees to 0 degrees	0	126	128
		0 degrees	127	128	
		0 degrees to +45 degrees	129	255	

Channel STANDARD	Name	Function	Min DMX	Max DMX	Default
		No Function	0	3	
		Macro 1	4	10	
		Macro 2	11	17	
		Macro 3	18	24	
		Macro 4	25	31	
		Macro 5	32	38	
		Macro 6	39	45	
		Macro 7	46	52	
		Macro 8	53	59	
		Macro 9	60	66	
		Macro 10	67	73	
		Macro 11	74	80	
		Macro 12	81	87	
		Macro 13	88	94	
		Macro 14	95	101	
		Macro 15	102	108	
		Macro 16	109	115	
		Macro 17	116	122	
43	Frame macros	Macro 18	123	129	000
		Macro 19	130	136	
		Macro 20	137	143	
		Macro 21	144	150	
		Macro 22	151	157	
		Macro 23	158	164	
		Macro 24	165	171	
		Macro 25	172	178	
		Macro 26	179	185	
		Macro 27	186	192	
		Macro 28	193	199	
		Macro 29	200	206	
		Macro 30	207	213	
		Macro 31	214	220	
		Macro 32	221	227	
		Macro 33	228	234	
		Macro 34	235	241	
		Macro 35	242	248	
		Macro 36	249	255	

Channel STANDARD	Name	Function	Min DMX	Max DMX	Default
44	Frame macros speed	Lineary from 0 to 100%	0	255	000
45	Focus Tracking (*See pag.25*)	OFF	0	49	000
		ON - Priority GOBO WHL 1	50	59	
		ON - Priority GOBO WHL 2	60	69	
		ON - Priority BLADES	70	79	
		ON - Priority IRIS	80	89	
		ON - Priority ANIMATION	90	99	
		ON - Priority OPEN	100	109	
		Reserved	110	255	
46	Control	No Function/Safe	0	1	000
		PAN REVERSE ON	2	3	
		PAN REVERSE OFF	4	5	
		TILT REVERSE ON	6	7	
		TILT REVERSE OFF	8	9	
		PAN/TILT MODE FAST	10	11	
		PAN/TILT MODE MEDIUM	12	13	
		PAN/TILT MODE SLOW	14	15	
		HOME MODE STANDARD	16	17	
		HOME MODE CUSTOM	18	19	
		MOVEMENT IN BLACKOUT ON	20	21	
		MOVEMENT IN BLACKOUT OFF	22	23	
		COLOR WHEEL BLACKOUT ON (index)	24	25	
		COLOR WHEEL BLACKOUT OFF (index)	26	27	
		ROTATING GOBO WHEEL BLACKOUT ON (index)	28	29	
		ROTATING GOBO WHEEL BLACKOUT OFF (index)	30	31	
		ROTATING GOBO WHEEL CONTINUOUS MOVEMENT (index)	32	33	
		ROTATING GOBO WHEEL STEP MOVE-MENT (index)	34	35	
		DISPLAY ON	36	37	
		DISPLAY 10S	38	39	
		DISPLAY 20S	40	41	
		DISPLAY 30S	42	43	
		FLIP DISPLAY ON	44	45	
		FLIP DISPLAY OFF	46	47	
		FLIP DISPLAY AUTO	48	49	

Channel STANDARD	Name	Function	Min DMX	Max DMX	Default
		KEY LOCK ON	50	51	
		KEY LOCK OFF	52	53	
		FAN MODE AUTO	54	55	
		FAN MODE SILENT	56	57	
		FAN MODE HIGH	58	59	
		NO SIGNAL HOLD	60	61	
		NO SIGNAL BLACKOUT	62	63	
		STATUS LED ON	64	65	
		STATUS LED OFF	66	67	
		DIMMER CURVE LINEAR	68	69	
		DIMMER CURVE S-CURVE	70	71	
		DIMMER CURVE SQUARE LAW	72	73	
		DIMMER CURVE INVERSE SQUARE LAW	74	75	
		DIMMER SPEED AUTO	76	77	
		DIMMER SPEED FAST	78	79	
		DIMMER SPEED MEDIUM	80	81	
		DIMMER SPEED SLOW	82	83	
		LED FREQUENCY 600HZ	84	85	
46	Control	LED FREQUENCY 1200HZ	86	87	000
		LED FREQUENCY 2000HZ	88	89	
		LED FREQUENCY 4000HZ	90	91	
		LED FREQUENCY 6000HZ	92	93	
		LED FREQUENCY 25KHZ	94	95	
		LED FREQUENCY 50KHZ	96	97	
		INVERT ZOOM OFF	98	99	
		INVERT ZOOM ON	100	101	
		RESET ALL	102	103	
		RESET PAN	104	105	
		RESET TILT	106	107	
		RESET PAN & TILT	108	109	
		RESET CYAN	110	111	
		RESET MAGENTA	112	113	
		RESET YELLOW	114	115	
		RESET CTO	116	117	
		RESET COLOR WHEEL	118	119	
		RESET GOBO WHEEL 1	120	121	
		RESET GOBO ROTATION 1	122	123	

Channel STANDARD	Name	Function	Min DMX	Max DMX	Default
46	Control	RESET GOBO WHEEL 2	124	125	000
		RESET GOBO ROTATION 2	126	127	
		RESET PRISM 1	128	129	
		RESET PRISM 1 ROTATION	130	131	
		RESET PRISM 2	132	133	
		RESET PRISM 2 ROTATION	134	135	
		RESET FROST 1	136	137	
		RESET FROST 2	138	139	
		RESET IRIS	140	141	
		RESET ZOOM	142	143	
		RESET FOCUS	144	145	
		RESET ANIMATION	146	147	
		RESET ANIMATION ROTATION	148	149	
		RESET BLADE 1 POSITON	150	151	
		RESET BLADE 1 ROT	152	153	
		RESET BLADE 2 POSITON	154	155	
		RESET BLADE 2 ROT	156	157	
		RESET BLADE 3 POSITON	158	159	
		RESET BLADE 3 ROT	160	161	
		RESET BLADE 4 POSITON	162	163	
		RESET BLADE 4 ROT	164	165	
		RESET FRAME ROT	166	167	
		Reserved	168	251	
		FACTORY DEFAULT OF CONTROL FUNCTIONS	252	253	
		Reserved	254	255	